LOCUS MAP
Not to Scale

SURVEY NOTES:

1. PLAN REFERENCES:
   1.1 BOOK 639, PAGE 12
   1.2 BOOK 3832, PAGE 515
2. THE SURVEY WAS MADE ON THE GROUND OF JANUARY OF 2018 BY MCKENZIE ENGINEERING GROUP, INC.
3. ELEVATIONS SHOWN ARE REFERENCED TO THE TOWN OF WELLESLEY VERTICAL DATUM BASE.
4. WETLAND RESOURCE AREAS WERE NOT ENCOUNTERED DURING THE FIELD SURVEY.
5. MINIMUM SETBACK REQUIREMENTS:
   SINGLE RESIDENCE 15 DISTRICT
   FRONT YARD 30'
   SIDE YARD 20'
   REAR YARD 15'
6. THE PROPERTY SHOWN HEREON IS LOCATED IN ZONE X OF THE FLOOD INSURANCE RATE MAP COMMUNITY PANEL No. 25021C0016E, WHICH BEARS AN EFFECTIVE DATE OF JULY 17, 2012.
7. THE PROPERTY SHOWN HEREON IS LOCATED IN A DEP ZONE 2 AND TOWN OF WELLESLEY WATER SUPPLY PROTECTION DISTRICT ZONE.
8. UTILITY INFORMATION FROM ABOVE GROUND OBSERVED EVIDENCE IN CONJUNCTION WITH DIG SAFE MARKINGS AND RECORD PLANS. THE LAND SURVEYOR MAKES NO GUARANTEES THAT THE UNDERGROUND UTILITIES SHOWN HEREON COMPRISE ALL SUCH UTILITIES IN THE AREA, EITHER IN SERVICE OR ABANDONED. THE LAND SURVEYOR FURTHER DOES NOT WARRANT THAT THE UNDERGROUND UTILITIES SHOWN ARE IN THE EXACT LOCATION INDICATED ALTHOUGH HE DOES CERTIFY THAT THEY ARE LOCATED AS ACCURATELY AS POSSIBLE FROM AVAILABLE INFORMATION AND CONSTRUCTION AS THE LAND SURVEYOR HAS NOT PHYSICALLY LOCATED THE UNDERGROUND UTILITIES. BEFORE CONSTRUCTION CALL DIG SAFE SYSTEMS, INC. AT 1-888-344-7233.

ABBREVIATIONS

FFE	FIRST FLOOR ELEVATION
BIT CONC.	BITUMINOUS CONCRETE PAVEMENT
CCB	CAPE COD BERM
EP	EDGE OF PAVEMENT
BC	BITUMINOUS CONCRETE CURB
(AM)	AS MEASURED
RET WALL	RETAINING WALL
CONC.	CONCRETE
RCP	REINFORCED CONCRETE PIPE
VGC	VERTICAL GRANITE CURB
ETW	EDGE OF TRAVEL WAY
MTL	METAL BERM
VCC	VERTICAL CONCRETE CURB
CMP	CORRUGATED METAL PIPE
TOW	TOP OF WALL
SGC	SLOPED GRANITE CURB

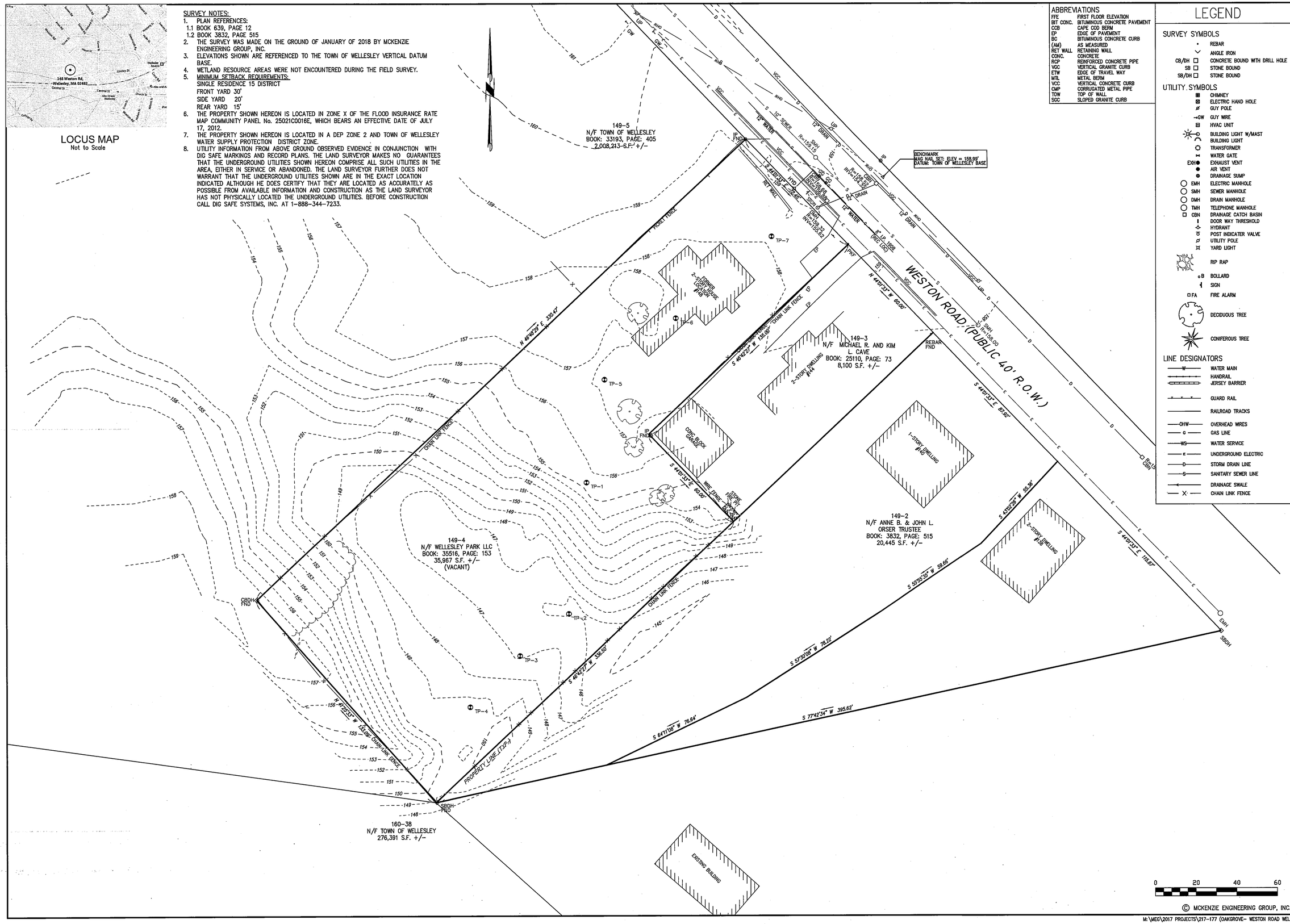

© MCKENZIE ENGINEERING GROUP, INC.

LEGEND

SURVEY SYMBOLS
- REBAR
- ANGLE IRON
- CB/DH — CONCRETE BOUND WITH DRILL HOLE
- SB — STONE BOUND
- SB/DH — STONE BOUND

UTILITY SYMBOLS
- CHIMNEY
- ELECTRIC HAND HOLE
- GUY POLE
- GW — GUY WIRE
- HVAC UNIT
- BUILDING LIGHT W/MAST
- BUILDING LIGHT
- TRANSFORMER
- WATER GATE
- EXH — EXHAUST VENT
- AIR VENT
- DRAINAGE SUMP
- EMH — ELECTRIC MANHOLE
- SMH — SEWER MANHOLE
- DMH — DRAIN MANHOLE
- TMH — TELEPHONE MANHOLE
- CBN — DRAINAGE CATCH BASIN
- DOOR WAY THRESHOLD
- HYDRANT
- POST INDICATER VALVE
- UTILITY POLE
- YARD LIGHT
- RIP RAP
- B — BOLLARD
- SIGN
- FA — FIRE ALARM
- DECIDUOUS TREE
- CONIFEROUS TREE

LINE DESIGNATORS
- W — WATER MAIN
- HANDRAIL
- JERSEY BARRIER
- GUARD RAIL
- RAILROAD TRACKS
- OHW — OVERHEAD WIRES
- G — GAS LINE
- WS — WATER SERVICE
- E — UNDERGROUND ELECTRIC
- D — STORM DRAIN LINE
- S — SANITARY SEWER LINE
- DRAINAGE SWALE
- X — CHAIN LINK FENCE

REV	DATE	DESCRIPTION	BY	APP
1	10/2/18	NO CHANGES	SBS	BCM

MCKENZIE ENGINEERING GROUP
Assinippi Office Park
150 Longwater Drive, Suite 101
Norwell, MA 02061
781.792.3900
www.mckeng.com

PROPOSED COMPREHENSIVE PERMIT DEVELOPMENT

(PARCEL ID 149-4)
148 WESTON ROAD
WELLESLEY, MASSACHUSETTS

PROFESSIONAL LAND SURVEYOR:
COMMONWEALTH OF MASSACHUSETTS
RICHARD J. HOOD
No. 35031
REGISTERED PROFESSIONAL LAND SURVEYOR
10/2/18

NOT FOR CONSTRUCTION

APPLICANT:
WELLESLEY PARK, LLC
49 COOLIDGE STREET
BROOKLINE, MASSACHUSETTS 02446

DRAWN BY:	ESS
DESIGNED BY:	ESS
CHECKED BY:	RLS
APPROVED BY:	RJH
DATE:	FEBRUARY 15, 2018
SCALE:	1"=20'
PROJECT NO.:	217-177

DWG. TITLE:
EXISTING CONDITIONS PLAN

DWG. NO:
EX-1

M:\MEG\2017 PROJECTS\217-177 (OAKGROVE- WESTON ROAD WELLESLY)\DWGS\SUBMISSIONS\1\217-177 C-1 (R1).DWG

LOCUS MAP
Not to Scale

LAND USAGE TABLES

SECTIONS XVIII AND XIX OF WELLESLEY ZONING BYLAWS

SINGLE RESIDENCE 15 DISTRICT		
CRITERIA	REQUIRED	PROPOSED
MIN. LOT AREA	15,000 S.F.	35,967 S.F.
MIN. FRONTAGE	60 FT.	72.45 FT.
MAX. BUILDING HEIGHT	45 FT.	APPROX. 58 FT. – 5 IN.
MAX RATIO OF BUILDING TO LOT AREA	18%	39%
MIN. FRONT YARD WIDTH	60 FT.	72.45 FT.
MIN. FRONT YARD DEPTH (SETBACK)	30 FT.	21.5 FT.
MIN. SIDE YARD WIDTH	20 FT.	4 FT.
MIN. REAR YARD DEPTH	15 FT.	3.8 FT.

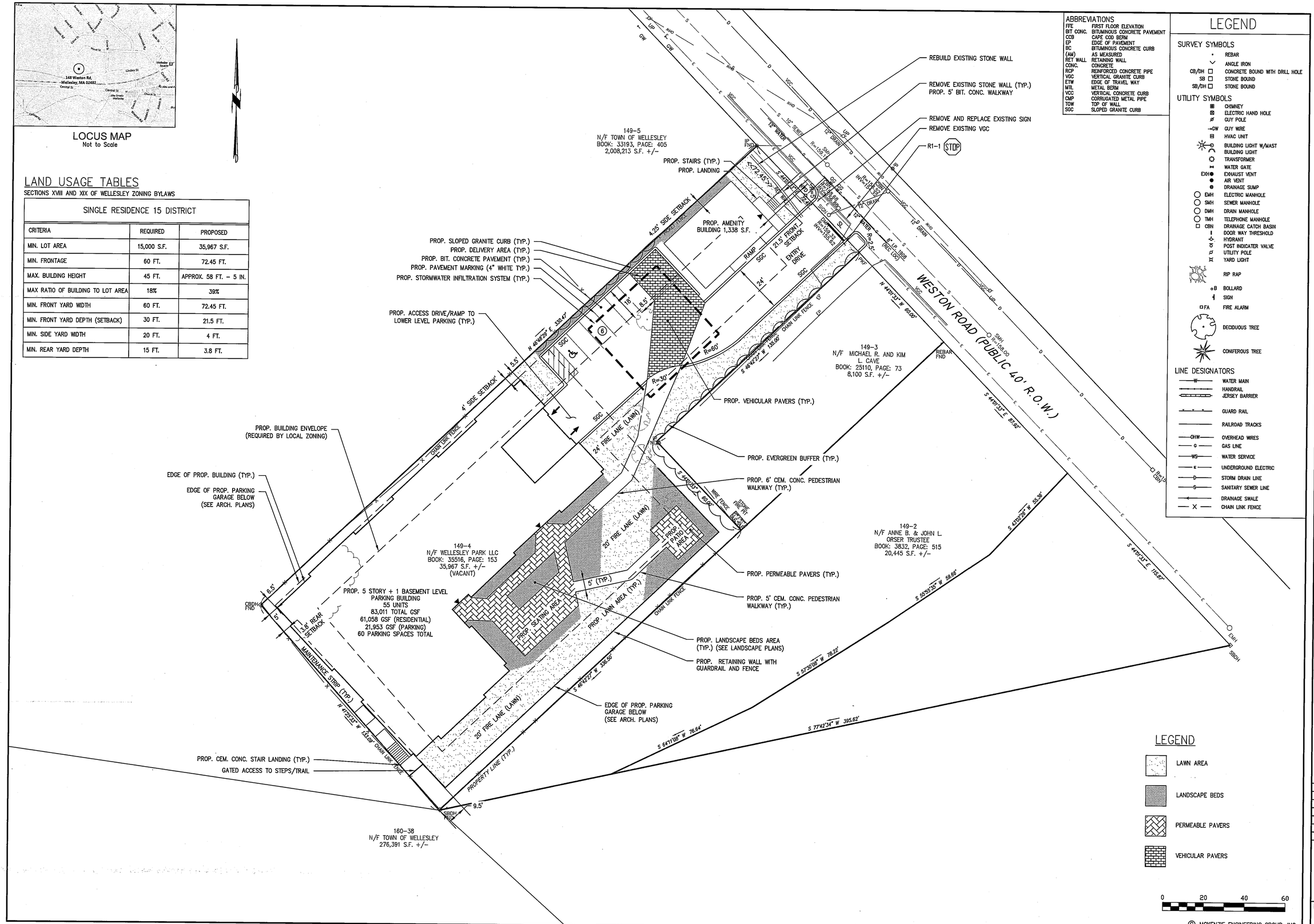

© MCKENZIE ENGINEERING GROUP, INC.

ABBREVIATIONS

FFE	FIRST FLOOR ELEVATION
BIT CONC.	BITUMINOUS CONCRETE PAVEMENT
CCB	CAPE COD BERM
EP	EDGE OF PAVEMENT
BC	BITUMINOUS CONCRETE CURB
(AM)	AS MEASURED
RET WALL	RETAINING WALL
CONC.	CONCRETE
RCP	REINFORCED CONCRETE PIPE
VGC	VERTICAL GRANITE CURB
ETW	EDGE OF TRAVEL WAY
M/L	METAL BERM
VCC	VERTICAL CONCRETE CURB
CMP	CORRUGATED METAL PIPE
TOW	TOP OF WALL
SGC	SLOPED GRANITE CURB

LEGEND

SURVEY SYMBOLS

- REBAR
- ANGLE IRON
- CB/DH — CONCRETE BOUND WITH DRILL HOLE
- SB — STONE BOUND
- SB/DH — STONE BOUND

UTILITY SYMBOLS

- CHIMNEY
- ELECTRIC HAND HOLE
- GUY POLE
- GW — GUY WIRE
- HVAC UNIT
- BUILDING LIGHT W/MAST
- BUILDING LIGHT
- TRANSFORMER
- WATER GATE
- EXH — EXHAUST VENT
- AIR VENT
- DRAINAGE SUMP
- EMH — ELECTRIC MANHOLE
- SMH — SEWER MANHOLE
- DMH — DRAIN MANHOLE
- TMH — TELEPHONE MANHOLE
- CBN — DRAINAGE CATCH BASIN
- DOOR WAY THRESHOLD
- HYDRANT
- POST INDICATER VALVE
- UTILITY POLE
- YARD LIGHT
- RIP RAP
- B — BOLLARD
- SIGN
- FA — FIRE ALARM
- DECIDUOUS TREE
- CONIFEROUS TREE

LINE DESIGNATORS

- W — WATER MAIN
- HANDRAIL
- JERSEY BARRIER
- GUARD RAIL
- RAILROAD TRACKS
- OHW — OVERHEAD WIRES
- G — GAS LINE
- WS — WATER SERVICE
- E — UNDERGROUND ELECTRIC
- D — STORM DRAIN LINE
- S — SANITARY SEWER LINE
- DRAINAGE SWALE
- X — CHAIN LINK FENCE

REV	DATE	DESCRIPTION	BY	APP
1	10/2/18	RELOCATED RETAINING WALL	SBS	BCM

MCKENZIE ENGINEERING GROUP
Assinippi Office Park
150 Longwater Drive, Suite 101
Norwell, MA 02061
781.792.3900
www.mckeng.com

PROPOSED COMPREHENSIVE PERMIT DEVELOPMENT

(PARCEL ID 149-4)
148 WESTON ROAD
WELLESLEY, MASSACHUSETTS

PROFESSIONAL ENGINEER:
COMMONWEALTH OF MASSACHUSETTS
BRADLEY C. McKENZIE
CIVIL
No. 36917
LICENSED PROFESSIONAL ENGINEER

NOT FOR CONSTRUCTION

APPLICANT:
WELLESLEY PARK, LLC
49 COOLIDGE STREET
BROOKLINE, MASSACHUSETTS 02446

DRAWN BY:	ESS
DESIGNED BY:	ESS
CHECKED BY:	BCM
APPROVED BY:	BCM
DATE:	FEBRUARY 15, 2018
SCALE:	1"=20'
PROJECT NO.:	217-177

DWG. TITLE:
SITE DEVELOPMENT PLAN

DWG. NO:
C-1

M:\MEG\2017 PROJECTS\217-177 (OAKGROVE- WESTON ROAD WELLESLY)\DWGS\SUBMISSIONS\1\217-177 C-1 (R1).DWG

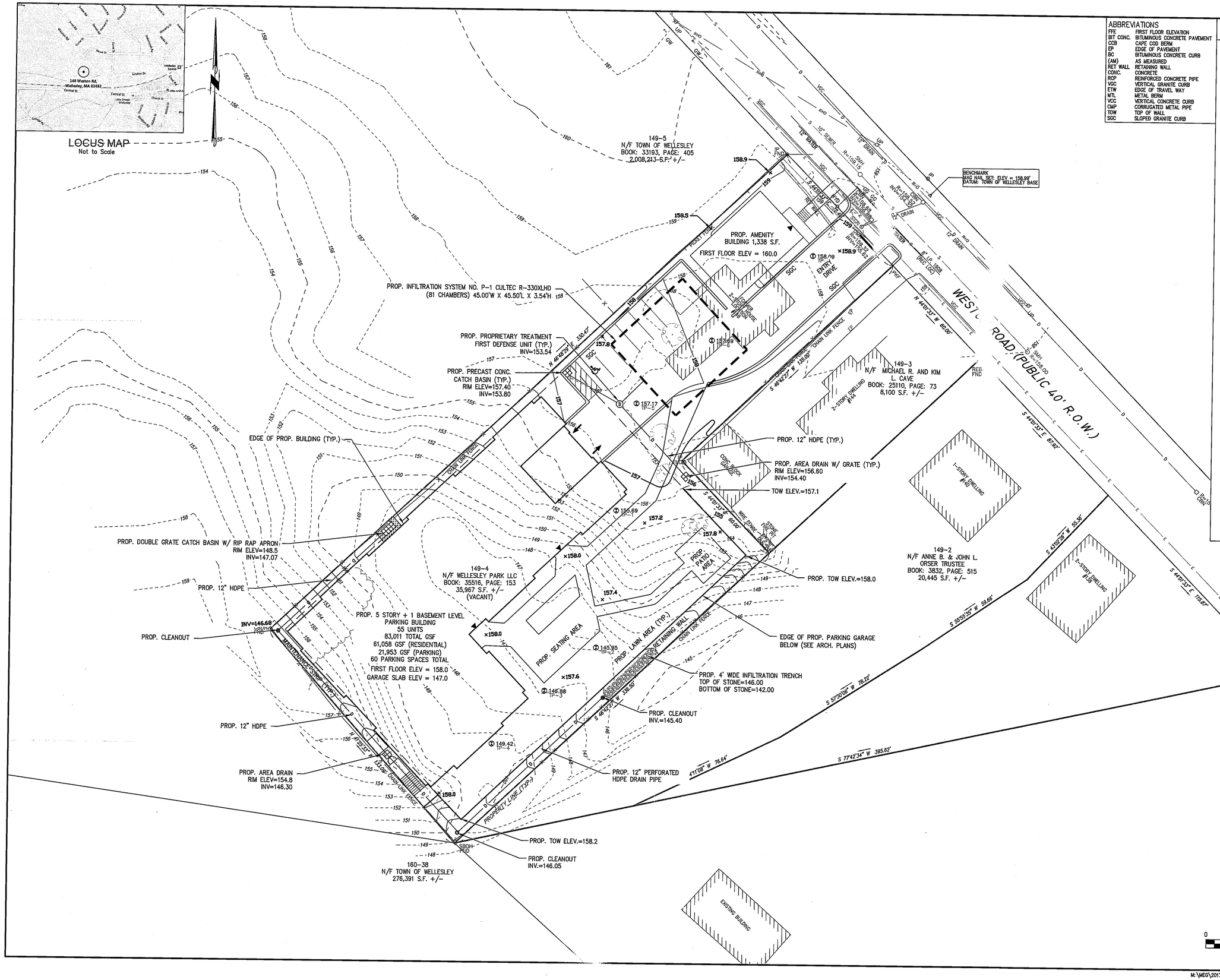

ABBREVIATIONS

FFE	FIRST FLOOR ELEVATION
BIT CONC.	BITUMINOUS CONCRETE PAVEMENT
CCB	CAPE COD BERM
EP	EDGE OF PAVEMENT
BC	BITUMINOUS CONCRETE CURB
(AM)	AS MEASURED
RET WALL	RETAINING WALL
CONC.	CONCRETE
RCP	REINFORCED CONCRETE PIPE
VGC	VERTICAL GRANITE CURB
ETW	EDGE OF TRAVEL WAY
MTL	METAL BERM
VCC	VERTICAL CONCRETE CURB
CMP	CORRUGATED METAL PIPE
TOW	TOP OF WALL
SGC	SLOPED GRANITE CURB

LEGEND

SURVEY SYMBOLS

- REBAR
- ANGLE IRON
- CB/DH — CONCRETE BOUND WITH DRILL HOLE
- SB — STONE BOUND
- SB/DH — STONE BOUND

UTILITY SYMBOLS

- CHIMNEY
- ELECTRIC HAND HOLE
- GUY POLE
- GW — GUY WIRE
- HVAC UNIT
- BUILDING LIGHT W/MAST
- BUILDING LIGHT
- TRANSFORMER
- WATER GATE
- EXH — EXHAUST VENT
- AIR VENT
- DRAINAGE SUMP
- EMH — ELECTRIC MANHOLE
- SMH — SEWER MANHOLE
- DMH — DRAIN MANHOLE
- TMH — TELEPHONE MANHOLE
- CBN — DRAINAGE CATCH BASIN
- DOOR WAY THRESHOLD
- HYDRANT
- POST INDICATER VALVE
- UTILITY POLE
- YARD LIGHT
- RIP RAP
- B — BOLLARD
- SIGN
- FA — FIRE ALARM
- DECIDUOUS TREE
- CONIFEROUS TREE

LINE DESIGNATORS

- W — WATER MAIN
- HANDRAIL
- JERSEY BARRIER
- GUARD RAIL
- RAILROAD TRACKS
- OHW — OVERHEAD WIRES
- G — GAS LINE
- WS — WATER SERVICE
- E — UNDERGROUND ELECTRIC
- D — STORM DRAIN LINE
- S — SANITARY SEWER LINE
- DRAINAGE SWALE
- X — CHAIN LINK FENCE

REV	DATE	DESCRIPTION	BY	APP
1	10/2/18	RELOCATED RETAINING WALL	SBS	BCM

MCKENZIE ENGINEERING GROUP
Assinippi Office Park
150 Longwater Drive, Suite 101
Norwell, MA 02061
781.792.3900
www.mckeng.com

PROPOSED COMPREHENSIVE PERMIT DEVELOPMENT

(PARCEL ID 149-4)
148 WESTON ROAD
WELLESLEY, MASSACHUSETTS

PROFESSIONAL ENGINEER:
COMMONWEALTH OF MASSACHUSETTS
BRADLEY C. McKENZIE
CIVIL
No. 36917
REGISTERED PROFESSIONAL ENGINEER

NOT FOR CONSTRUCTION

APPLICANT:
WELLESLEY PARK, LLC
49 COOLIDGE STREET
BROOKLINE, MASSACHUSETTS 02446

DRAWN BY:	ESS
DESIGNED BY:	ESS
CHECKED BY:	BCM
APPROVED BY:	BCM
DATE:	FEBRUARY 15, 2018
SCALE:	1"=20'
PROJECT NO.:	217-177

DWG. TITLE:
GRADING & DRAINAGE PLAN

DWG. NO:
C-2

© MCKENZIE ENGINEERING GROUP, INC.

M:\MEG\2017 PROJECTS\217-177 (OAKGROVE- WESTON ROAD WELLESLY)\DWGS\SUBMISSIONS\1\217-177 C-1 (R1).DWG

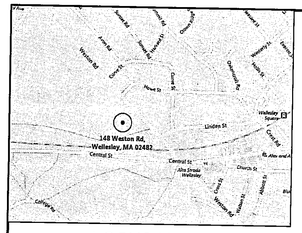

LOCUS MAP
Not to Scale

DIG SAFE
MA – RI – ME – NH – VT
CALL TOLL FREE
1-888-344-7233
UTILITIES UNDERGROUND PLANT DAMAGE PREVENTION SYSTEM

GENERAL UTILITY NOTES:

1. THE CONTRACTOR IS SPECIFICALLY CAUTIONED THAT THE LOCATION AND/OR ELEVATION OF EXISTING UTILITIES AND STRUCTURES AS SHOWN ON THESE PLANS IS BASED ON RECORDS OF VARIOUS UTILITY COMPANIES AND WHERE POSSIBLE, MEASUREMENTS TAKEN IN THE FIELD. THIS INFORMATION IS NOT TO BE RELIED UPON AS BEING EXACT OR COMPLETE. THE LOCATION OF ALL UNDERGROUND UTILITIES AND STRUCTURES SHALL BE VERIFIED IN THE FIELD BY THE CONTRACTOR PRIOR TO THE START OF CONSTRUCTION. THE CONTRACTOR MUST CONTACT THE APPROPRIATE UTILITY COMPANY, ANY GOVERNING PERMITTING AUTHORITY, AND "DIGSAFE" AT LEAST 72 HOURS PRIOR TO ANY EXCAVATION WORK TO REQUEST EXACT FIELD LOCATION OF UTILITIES AND THE ENGINEER SHALL BE NOTIFIED IN WRITING OF ANY UTILITIES INTERFERING WITH THE PROPOSED CONSTRUCTION AND APPROPRIATE REMEDIAL ACTION SHALL BE TAKEN BEFORE PROCEEDING WITH THE WORK. IT SHALL BE THE RESPONSIBILITY OF THE CONTRACTOR TO RELOCATE ALL EXISTING UTILITIES WHICH CONFLICT WITH THE PROPOSED IMPROVEMENTS SHOWN ON THE PLAN.
2. ALL EXISTING UTILITIES WITHIN THE SITE ARE TO REMOVED UNLESS OTHERWISE STATED TO REMAIN.
3. THE CONTRACTOR SHALL BE RESPONSIBLE FOR ESTABLISHING AND MAINTAINING ALL CONTROL POINTS AND BENCHMARKS NECESSARY FOR THE WORK.
4. THE CONTRACTOR SHALL COORDINATE ALL STREET WORK WITH THE WELLESLEY DPW.
5. THE CONTRACTOR SHALL EXCAVATE THE TEST PITS PRIOR TO INSTALLING THE DOMESTIC WATER AND FIRE SERVICES TO VERIFY THE ELEVATIONS AND LOCATIONS OF EXISTING UTILITIES. THE CONTRACTOR SHALL PROVIDE THE OWNER AND ENGINEER WITH THE RESULTS PRIOR TO COMMENCING ANY WORK.
6. THE CONTRACTOR SHALL EXCAVATE THE UTILITY TRENCHES IN THE LOCATIONS SHOWN ON THE PLAN PRIOR TO COMMENCING WORK TO VERIFY THE ELEVATIONS AND LOCATIONS OF EXISTING UTILITIES. THE CONTRACTOR SHALL PROVIDE THE OWNER AND ENGINEER WITH THE RESULTS PRIOR TO COMMENCING ANY WORK.
7. ALL WATER AND FIRE SERVICES SHALL BE INSTALLED WITH 5' OF COVER EXCEPT AS NOTED OR DETAILED OTHERWISE.
8. THE DOMESTIC WATER SERVICE AND FIRE SERVICE SHALL BE CEMENT LINED DUCTILE IRON PIPE (C.L.D.I.) AND SHALL BE INSTALLED WITH APPROPRIATELY SIZED TAPPING SLEEVE, GATE VALVE AND BOX.
9. ALL WATER AND FIRE SERVICE APPURTENANCES, MATERIALS, METHODS OF INSTALLATION SHALL MEET OR EXCEED ALL LOCAL MUNICIPAL REQUIREMENTS.
10. THE FIRE SERVICE AND DOMESTIC WATER SERVICE SHALL BE ADEQUATELY PROTECTED AGAINST BACKFLOW (BACKFLOW PREVENTION) AT THE BUILDING.
11. AFTER PRESSURE TESTING AND CHLORINATION IS COMPLETED, SAMPLES SHALL BE TAKEN FROM THE FIRE SERVICE AND DOMESTIC WATER SERVICE AND SHALL BE TESTED AT 200 PSI FOR A MINIMUM OF 2 HOURS. THE CONTRACTOR IS REQUIRED TO NOTIFY THE WELLESLEY DEPARTMENT OF PUBLIC WORKS AT LEAST 24 HOURS PRIOR TO THE TESTING.
12. THE FIRE SERVICE AND DOMESTIC WATER SERVICE SHALL BE TESTED IN ACCORDANCE WITH DEPARTMENT OF ENVIRONMENTAL PROTECTION REGULATIONS. A MINIMUM OF 2 SEPARATE WATER SAMPLES SHALL BE TESTED AT A STATE CERTIFIED LABORATORY.
13. A MINIMUM OF 10 FEET CLEAR HORIZONTALLY SHALL BE MAINTAINED BETWEEN SANITARY SEWER SERVICES AND WATER SERVICES. WHENEVER CONDITIONS PREVENT A LATERAL SEPARATION OF 10 FEET TO A WATER SERVICE THE ELEVATION OF THE CROWN OF THE SEWER SHALL BE AT LEAST 18 INCHES BELOW THE INVERT OF THE WATER SERVICE.
14. ALL GRAVITY SEWER PIPE SHALL BE POLYVINYL CHLORIDE (PVC) SDR-35 UNLESS OTHERWISE NOTED.
15. WHERE SANITARY SEWERS CROSS WATER MAINS, THE SEWER SHALL BE LAID AT SUCH AN ELEVATION THAT THE CROWN OF THE SEWER IS AT LEAST 18 INCHES BELOW THE INVERT OF THE WATER MAIN. IF THE ELEVATION OF THE SEWER CANNOT BE VARIED TO MEET THIS REQUIREMENT, THE WATER MAIN SHALL BE RELOCATED TO PROVIDE THIS SEPARATION OR CONSTRUCTED WITH MECHANICAL-JOINT PIPE FOR A DISTANCE OF 10 FEET ON EACH SIDE OF THE SEWER. ONE FULL LENGTH OF WATER MAIN SHALL BE CENTERED OVER THE SEWER SO THAT BOTH JOINTS WILL BE AS FAR FROM THE SEWER AS POSSIBLE. WHENEVER IT IS IMPOSSIBLE TO OBTAIN VERTICAL SEPARATION AS STIPULATED ABOVE, BOTH THE WATER MAIN AND THE SEWER MAIN SHALL BE ENCASED IN CONCRETE FOR A MINIMUM DISTANCE OF 10 FEET FROM THE CROSSING POINT OF THE OTHER PIPE AS MEASURED NORMALLY FROM ALL POINTS ALONG THE PIPE.
16. THE LOCATIONS OF PROPOSED ELECTRIC, TELEPHONE AND COMMUNICATION (E.T.C.) SERVICES ARE APPROXIMATE. THE PROJECT ELECTRICAL ENGINEER SHALL VERIFY THESE LOCATIONS PRIOR TO THE START OF CONSTRUCTION. COORDINATE ALL E.T.C. WORK WITH THE APPROPRIATE UTILITY COMPANIES.
17. THE PROPOSED GAS SERVICE LOCATION IS APPROXIMATE ONLY. THE CONTRACTOR SHALL COORDINATE THE GAS SERVICE INSTALLATION WITH NATIONAL GRID. THE CONTRACTOR SHALL GIVE NATIONAL GRID ADVANCE NOTICE OF WHEN THE GAS LINE CAN BE INSTALLED.
18. ALL TRENCH WORK TO BE BACKFILLED WITH FLOWABLE FILL. STREET PATCH TO MATCH EXISTING PAVEMENT THICKNESS.
19. ALL CONSTRUCTION WORK SHALL BE PERFORMED IN ACCORDANCE WITH WELLESLEY DEPARTMENT OF PUBLIC WORKS SPECIFICATIONS.

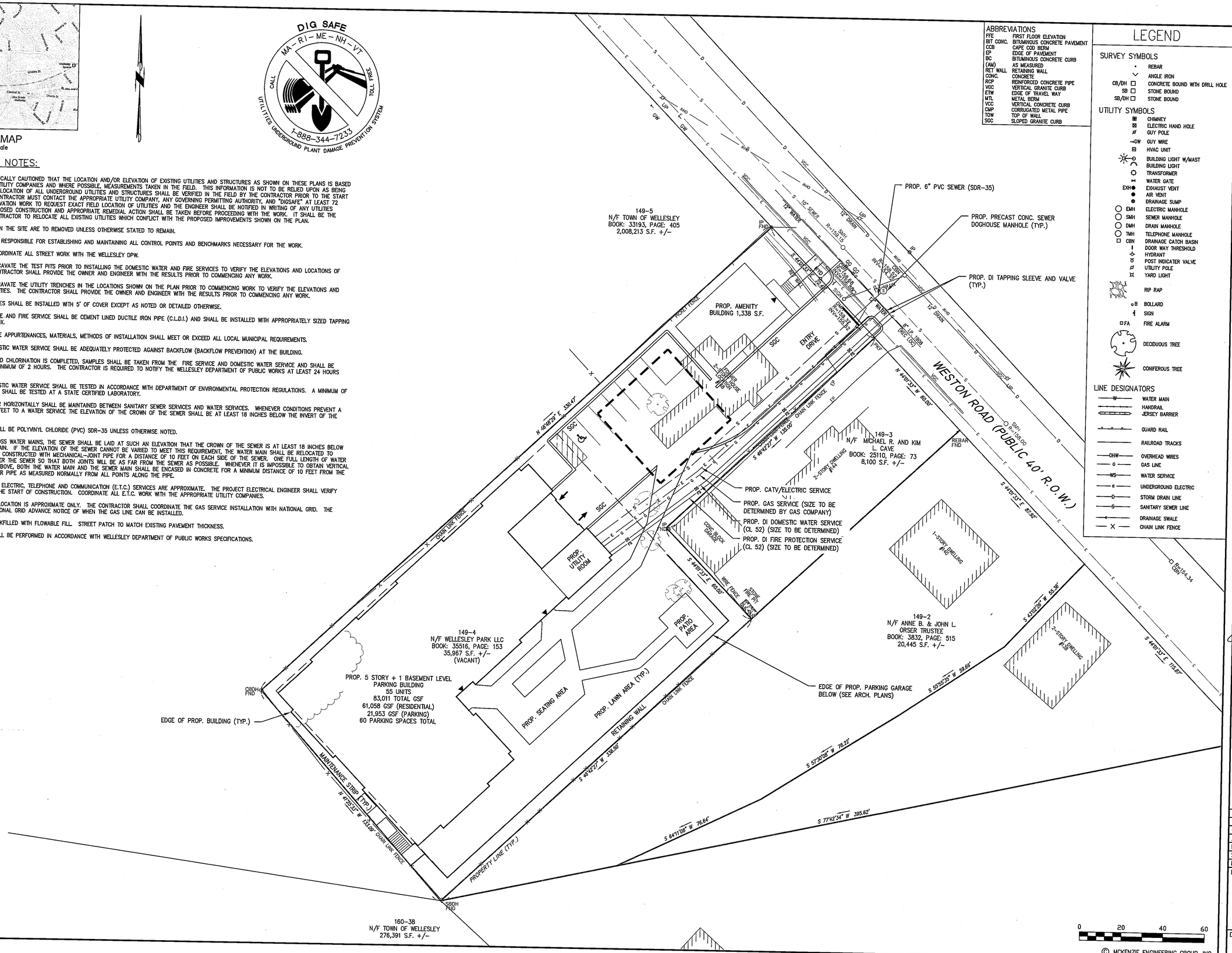

ABBREVIATIONS

FFE	FIRST FLOOR ELEVATION
BIT CONC.	BITUMINOUS CONCRETE PAVEMENT
CCB	CAPE COD BERM
EP	EDGE OF PAVEMENT
BC	BITUMINOUS CONCRETE CURB
(AM)	AS MEASURED
RET WALL	RETAINING WALL
CONC.	CONCRETE
RCP	REINFORCED CONCRETE PIPE
VGC	VERTICAL GRANITE CURB
ETW	EDGE OF TRAVEL WAY
MTL	METAL BERM
VCC	VERTICAL CONCRETE CURB
CMP	CORRUGATED METAL PIPE
TOW	TOP OF WALL
SGC	SLOPED GRANITE CURB

LEGEND

SURVEY SYMBOLS
- REBAR
- ANGLE IRON
- CB/DH — CONCRETE BOUND WITH DRILL HOLE
- SB — STONE BOUND
- SB/DH — STONE BOUND

UTILITY SYMBOLS
- CHIMNEY
- ELECTRIC HAND HOLE
- GUY POLE
- GW — GUY WIRE
- HVAC UNIT
- BUILDING LIGHT W/MAST
- BUILDING LIGHT
- TRANSFORMER
- WATER GATE
- EXH — EXHAUST VENT
- AIR VENT
- DRAINAGE SUMP
- EMH — ELECTRIC MANHOLE
- SMH — SEWER MANHOLE
- DMH — DRAIN MANHOLE
- TMH — TELEPHONE MANHOLE
- CBN — DRAINAGE CATCH BASIN
- DOOR WAY THRESHOLD
- HYDRANT
- POST INDICATER VALVE
- UTILITY POLE
- YARD LIGHT
- RIP RAP
- B — BOLLARD
- SIGN
- FA — FIRE ALARM
- DECIDUOUS TREE
- CONIFEROUS TREE

LINE DESIGNATORS
- W — WATER MAIN
- HANDRAIL
- JERSEY BARRIER
- GUARD RAIL
- RAILROAD TRACKS
- OHW — OVERHEAD WIRES
- G — GAS LINE
- WS — WATER SERVICE
- E — UNDERGROUND ELECTRIC
- D — STORM DRAIN LINE
- S — SANITARY SEWER LINE
- DRAINAGE SWALE
- X — CHAIN LINK FENCE

REV	DATE	DESCRIPTION	BY	APP
1	10/2/18	RELOCATED RETAINING WALL	SBS	BCM

MCKENZIE ENGINEERING GROUP
Assinippi Office Park
150 Longwater Drive, Suite 101
Norwell, MA 02061
781.792.3900
www.mckeng.com

PROPOSED COMPREHENSIVE PERMIT DEVELOPMENT

(PARCEL 149-4)
148 WESTON ROAD
WELLESLEY, MASSACHUSETTS

PROFESSIONAL ENGINEER:
COMMONWEALTH OF MASSACHUSETTS
BRADLEY C. McKENZIE
CIVIL
No. 36917
REGISTERED PROFESSIONAL ENGINEER

APPLICANT:
WELLESLEY PARK, LLC
49 COOLIDGE STREET
BROOKLINE, MASSACHUSETTS 02446

NOT FOR CONSTRUCTION

DRAWN BY:	ESS
DESIGNED BY:	ESS
CHECKED BY:	BCM
APPROVED BY:	BCM
DATE:	FEBRUARY 15, 2018
SCALE:	1"=20'
PROJECT NO.:	217-177

DWG. TITLE:
UTILITIES SITE PLAN

DWG. NO:
C-3

© MCKENZIE ENGINEERING GROUP, INC.

M:\MEG\2017 PROJECTS\217-177 (OAKGROVE- WESTON ROAD WELLESLY)\DWGS\SUBMISSIONS\1\217-177 C-1 (R1).DWG

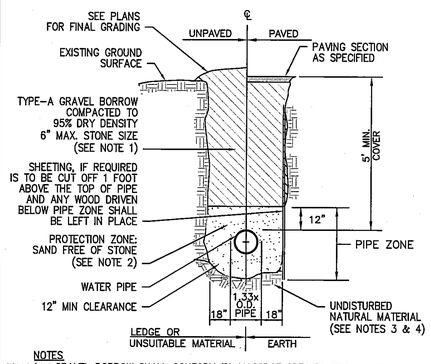

NOTES
1. GRAVEL BORROW SHALL CONFORM TO MASSDOT SPECIFICATION M1.03.0.
2. SAND BEDDING SHALL CONFORM TO MASSDOT SPECIFICATIONS.
3. SUBGRADE SHALL CONSIST OF NATIVE SOIL OR IMPORTED SOIL CONFORMING TO THE MASSDOT SPECIFICATION FOR ORDINARY BORROW AND SHALL BE FREE OF ANY UNSUITABLE SOILS OR MATERIAL.
4. UNSUITABLE SOIL OR MATERIAL SHALL INCLUDE BUT NOT BE LIMITED TO PEAT, MUCK, BROKEN PAVEMENT, STUMPS, LOGS, CONSTRUCTION DEBRIS OR ANY OTHER DELETERIOUS MATERIAL.

TYPICAL WATER TRENCH DETAIL
N.T.S.

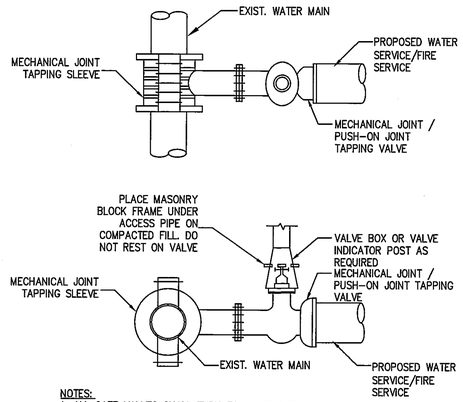

NOTES:
1. ALL GATE VALVES SHALL TURN TO THE RIGHT.
2. ALL GATE VALVES TO BE RESILIENT SEAT, EPOXY COATED.

TYPICAL TAPPING SLEEVE AND VALVE BOX
N.T.S.

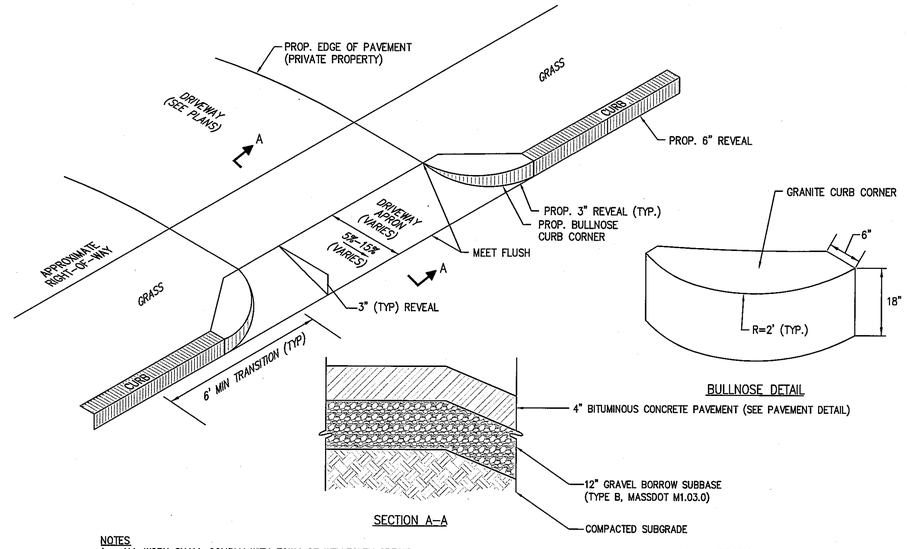

NOTES
1. ALL WORK SHALL COMPLY WITH TOWN OF WELLESLEY SPECIFICATION FOR PORTLAND CEMENT CONCRETE SIDEWALKS. LATEST REVISION.
2. SUBGRADE SHALL CONSIST OF NATIVE SOIL OR IMPORTED SOIL CONFORMING TO MASSDOT SPECIFICATION FOR ORDINARY BORROW AND SHALL BE FREE OF ANY UNSUITABLE MATERIALS.

DRIVEWAY APRON DETAIL
N.T.S.

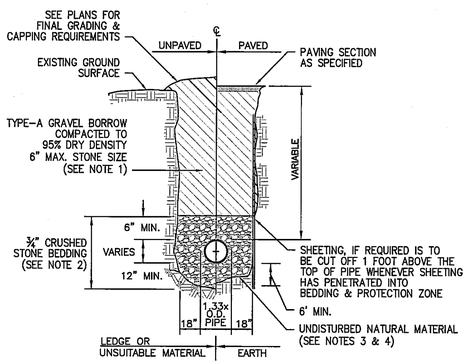

NOTES
1. GRAVEL BORROW SHALL CONFORM TO MASSDOT SPECIFICATION M1.03.0.
2. CRUSHED STONE BEDDING SHALL CONFORM TO MASSDOT SPECIFICATION M2.01.1.
3. SUBGRADE SHALL CONSIST OF NATIVE SOIL OR IMPORTED SOIL CONFORMING TO THE MASSDOT SPECIFICATION FOR ORDINARY BORROW AND SHALL BE FREE OF ANY UNSUITABLE SOILS OR MATERIAL.
4. UNSUITABLE SOIL OR MATERIAL SHALL INCLUDE BUT NOT BE LIMITED TO PEAT, MUCK, BROKEN PAVEMENT, STUMPS, LOGS, CONSTRUCTION DEBRIS OR ANY OTHER DELETERIOUS MATERIAL.

GRAVITY SEWER TRENCH DETAIL
N.T.S.

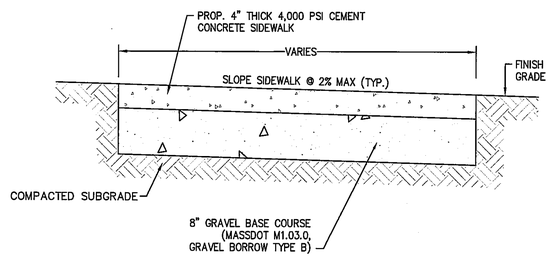

NOTES
1. ALL WORK SHALL COMPLY WITH TOWN OF WELLESLEY SPECIFICATION FOR PORTLAND CEMENT CONCRETE SIDEWALKS. LATEST REVISION.
2. SUBGRADE SHALL CONSIST OF NATIVE SOIL OR IMPORTED SOIL CONFORMING TO MASSDOT SPECIFICATION FOR ORDINARY BORROW AND SHALL BE FREE OF ANY UNSUITABLE MATERIALS.

CEMENT CONCRETE SIDEWALK DETAIL
N.T.S.

NOTE:
EXISTING SEWER SHALL REMAIN ACTIVE UNTIL DIRECTED BY THE ENGINEER TO BE CUT AND PLUGGED.

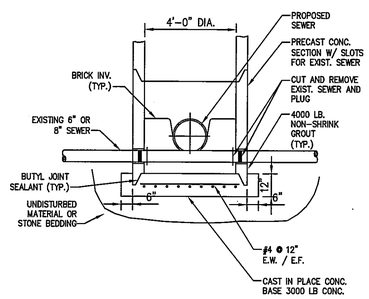

TYPICAL DOGHOUSE MANHOLE
N.T.S.

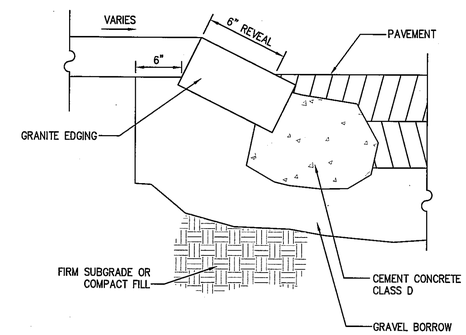

SLOPED GRANITE CURB DETAIL
N.T.S.

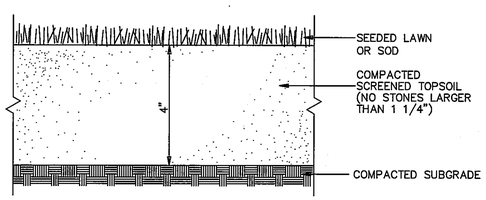

NOTE:
LOAM & SEED MATERIAL SHALL CONFORM TO MASSDOT MATERIAL SPECIFICATIONS M1.05.0, M1.07.0, M1.08.1, AND CONSTRUCTION METHODS 751.80 TO 751.83

SEEDED OR SODDED LAWN DETAIL
N.T.S.

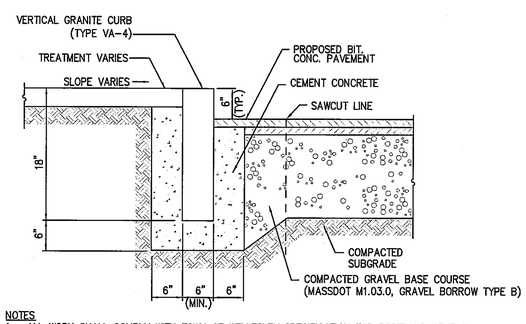

NOTES
1. ALL WORK SHALL COMPLY WITH TOWN OF WELLESLEY SPECIFICATION FOR PORTLAND CEMENT CONCRETE SIDEWALKS. LATEST REVISION.
2. SUBGRADE SHALL CONSIST OF NATIVE SOIL OR IMPORTED SOIL CONFORMING TO MASSDOT SPECIFICATION FOR ORDINARY BORROW AND SHALL BE FREE OF ANY UNSUITABLE MATERIALS.

VERTICAL GRANITE CURB (VGC) DETAIL
N.T.S.

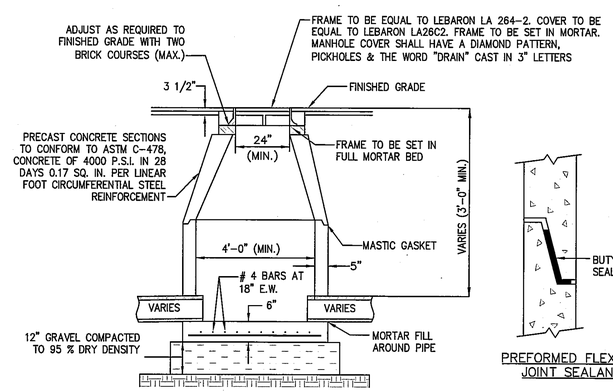

TYPICAL PRECAST DRAIN MANHOLE
N.T.S.

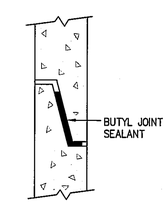

PREFORMED FLEXIBLE JOINT SEALANT

Hydro International
Stormwater Solutions
94 Hutchins Drive
Portland, Maine 04102
Tel: (207) 756-6200
Fax: (207) 756-6212
stormwaterinquiry@hydro-int.com

MANHOLE WALL AND SLAB THICKNESS ARE NOT TO SCALE.

CONTACT HYDRO INTERNATIONAL FOR A BOTTOM OF STRUCTURE ELEVATION PRIOR TO SETTING FIRST DEFENSE MANHOLE.

CONTRACTOR TO CONFIRM RIM, PIPE INVERTS, PIPE DIA. AND PIPE ORIENTATION PRIOR TO RELEASING UNIT TO FABRICATION.

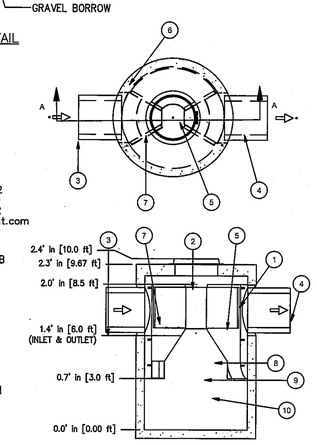

SECTION A-A

Parts List

ITEM	QTY.	DESCRIPTION	SIZE (in)
1	1	I.D. CONCRETE MANHOLE	
2	1	INLET CHUTE (W/ FLOATABLES TRAP)	
3	1	OUTLET CHUTE	
4	1	INLET PIPE (BY OTHERS)	
5	1	OUTLET PIPE (BY OTHERS)	
6	1	HIGH FLOW BYPASS	
7	1	FRAME AND COVER (OR GRATE)	

FIRST DEFENSE UNIT
N.T.S.

© MCKENZIE ENGINEERING GROUP, INC.

REV	DATE	DESCRIPTION	BY	APP
1	10/2/18	NO CHANGES	SBS	BCM

MCKENZIE ENGINEERING GROUP
Assinippi Office Park
150 Langwater Drive, Suite 101
Norwell, MA 02061
781.792.3900
www.mckeng.com

PROPOSED COMPREHENSIVE PERMIT DEVELOPMENT

(PARCEL ID 149-4)
148 WESTON ROAD
WELLESLEY, MASSACHUSETTS

PROFESSIONAL ENGINEER:
COMMONWEALTH OF MASSACHUSETTS
BRADLEY C. MCKENZIE
CIVIL
No. 35917
REGISTERED PROFESSIONAL ENGINEER

NOT FOR CONSTRUCTION

APPLICANT:
WELLESLEY PARK, LLC
49 COOLIDGE STREET
BROOKLINE, MASSACHUSETTS 02446

DRAWN BY:	ESS
DESIGNED BY:	ESS
CHECKED BY:	BCM
APPROVED BY:	BCM
DATE:	FEBRUARY 15, 2018
SCALE:	1"=20'
PROJECT NO.:	217-177

DWG. TITLE:
CONSTRUCTION DETAILS

DWG. NO:
C-4

M:\MEG\2017 PROJECTS\217-177 (OAKGROVE- WESTON ROAD WELLESLY)\DWGS\SUBMISSIONS\1\217-177 DETAILS.DWG

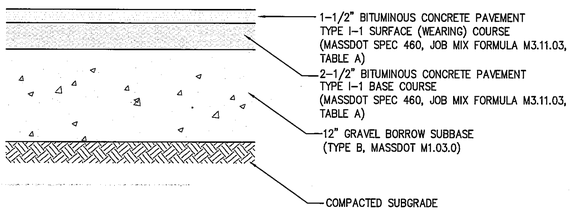

PARKING AREA PAVEMENT DETAIL
N.T.S.

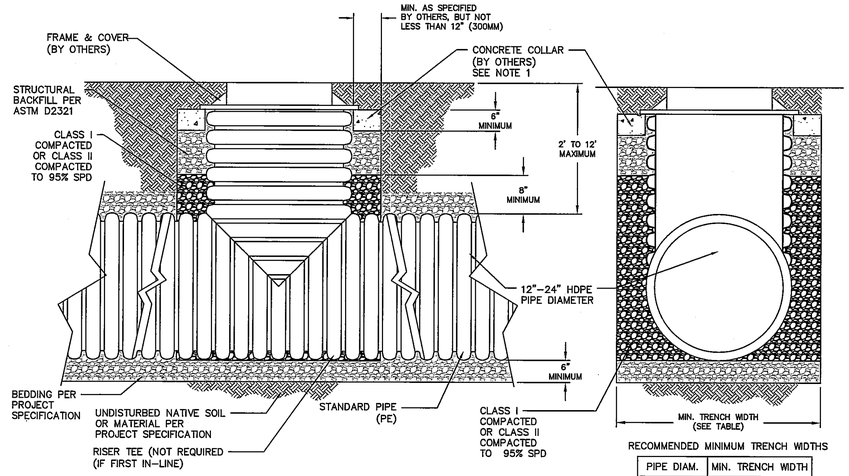

RECOMMENDED MINIMUM TRENCH WIDTHS

PIPE DIAM.	MIN. TRENCH WIDTH
12"	30"
15"	34"
18"	39"
24"	48"

NOTES:

1. CONCRETE COLLAR SHALL BE DESIGNED BY OTHERS (ENGINEER OF RECORD, CONTRACT ENGINEER, ETC.) FOR THE SPECIFIC PROJECT AND SITE CONDITIONS TO CARRY ALL ANTICIPATED LOADING.
2. FOR PROJECTS WHERE COVER EXCEEDS THE MINIMUM OR MAXIMUM VALUES SHOWN, CONTACT ADS FOR SPECIFIC DESIGN CONSIDERATIONS.

DRAIN INLET DETAIL
N.T.S

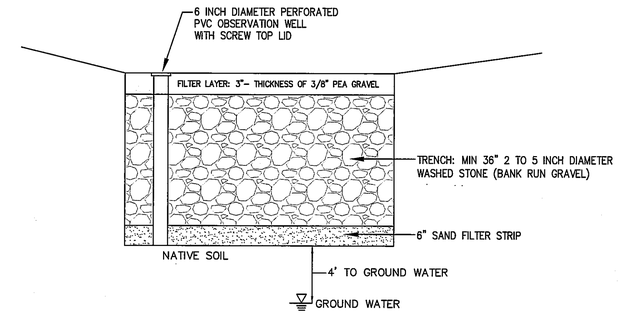

INFILTRATION TRENCH DETAIL
N.T.S.

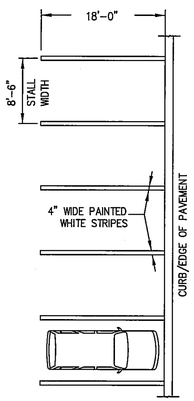

STANDARD SPACE

TYPICAL STRIPING DETAILS
N.T.S.

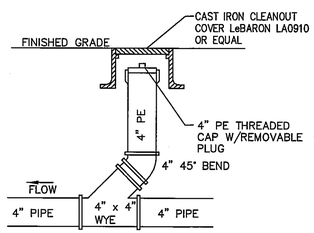

NOTE:

1. CLEANOUT SHOWN ABOVE IS FOR 4" PIPE. PROPOSED CLEANOUTS VARY IN SIZE AND THE APPURTENANCES SHALL ALSO VARY ACCORDINGLY.

CLEANOUT DETAIL
N.T.S.

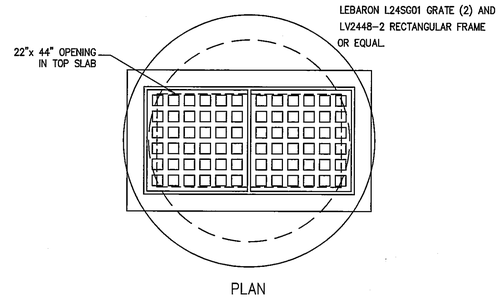

DOUBLE GRATE CATCH BASIN DETAIL
N.T.S.

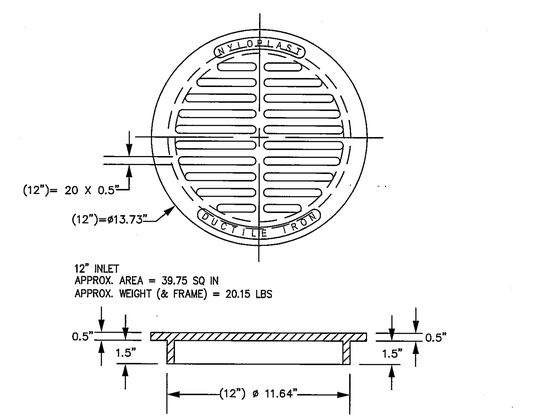

NOTES:

DIMENSION SHOWN FOR INFORMATIONAL PURPOSES AND MAY VARY.
GRATE HAS LIGHT DUTY RATING, IF VEHICLE LOADS ARE ANTICIPATED H-20 RATING REQ'D
QUALITY: MATERIALS SHALL CONFORM TO ASTM A536 GRADE 70-50-05
PAINT: CASTINGS ARE FURNISHED WITH A BLACK PAINT
SIZE OF OPENING MEETS REQUIREMENTS OF AMERICAN DISABILITY ACT AS STATED IN FEDERAL REGISTER PART III, DEPARTMENT OF JUSTICE, 28 CFR PART 36. NONDISCRIMINATION ON THE BASIS OF DISABILITY BY PUBLIC ACCOMMODATIONS AND IN COMMERCIAL FACILITIES, FINAL BY RULE.

12" DRAIN INLET COVER
N.T.S.

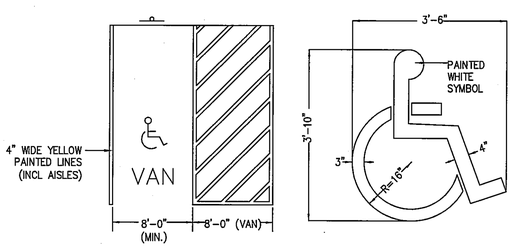

HANDICAP PARKING STALL DETAIL
N.T.S.

PAINTED HANDICAP SYMBOL DETAIL
N.T.S.

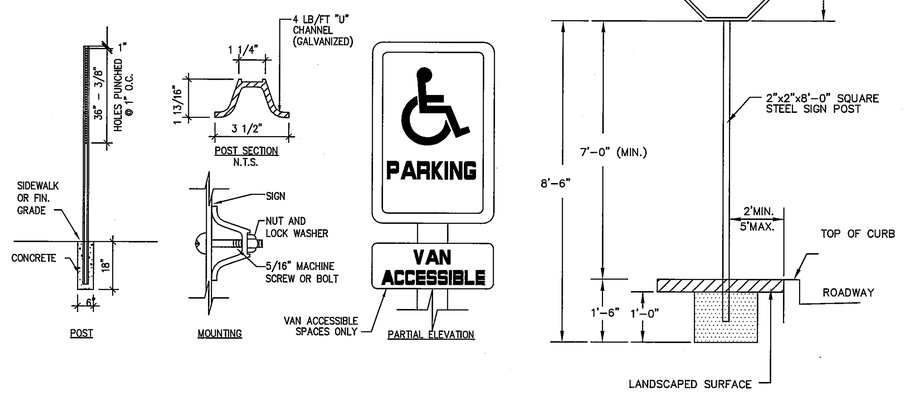

SIGN DETAIL
SCALE: N.T.S.

© MCKENZIE ENGINEERING GROUP, INC.

M:\MEG\2017 PROJECTS\217-177 (OAKGROVE- WESTON ROAD WELLESLY)\DWGS\SUBMISSIONS\1\217-177 DETAILS.DWG

REV	DATE	DESCRIPTION	BY	APP
1	10/2/18	REMOVED WALL DETAIL	SBS	BCM

MCKENZIE ENGINEERING GROUP
Assinippi Office Park
150 Longwater Drive, Suite 101
Norwell, MA 02061
781.792.3900
www.mckeng.com

PROPOSED COMPREHENSIVE PERMIT DEVELOPMENT

(PARCEL ID 149-4)
148 WESTON ROAD
WELLESLEY, MASSACHUSETTS

PROFESSIONAL ENGINEER:
COMMONWEALTH OF MASSACHUSETTS
BRADLEY C. MCKENZIE
CIVIL
No. 35917
REGISTERED PROFESSIONAL ENGINEER

NOT FOR CONSTRUCTION

APPLICANT:
WELLESLEY PARK, LLC
49 COOLIDGE STREET
BROOKLINE, MASSACHUSETTS 02446

DRAWN BY:	ESS
DESIGNED BY:	ESS
CHECKED BY:	BCM
APPROVED BY:	BCM
DATE:	FEBRUARY 15, 2018
SCALE:	1"=20'
PROJECT NO.:	217-177

DWG. TITLE:
CONSTRUCTION DETAILS

DWG. NO:
C-5