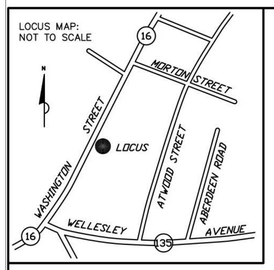

REFERENCES
NORFOLK COUNTY REGISTRY OF DEEDS
PLAN WITH BOOK 1283 PAGE 268
PLAN 139 OF 1922
PLAN 132 OF 1923
PLAN 275 OF 1923
PLAN 572 OF 1926
PLAN 182 OF 1943
PLAN 1371 OF 1950
LAND COURT PLAN 7696-B

BENCHMARK
HIGH PT BOUND
ELEV=148.28

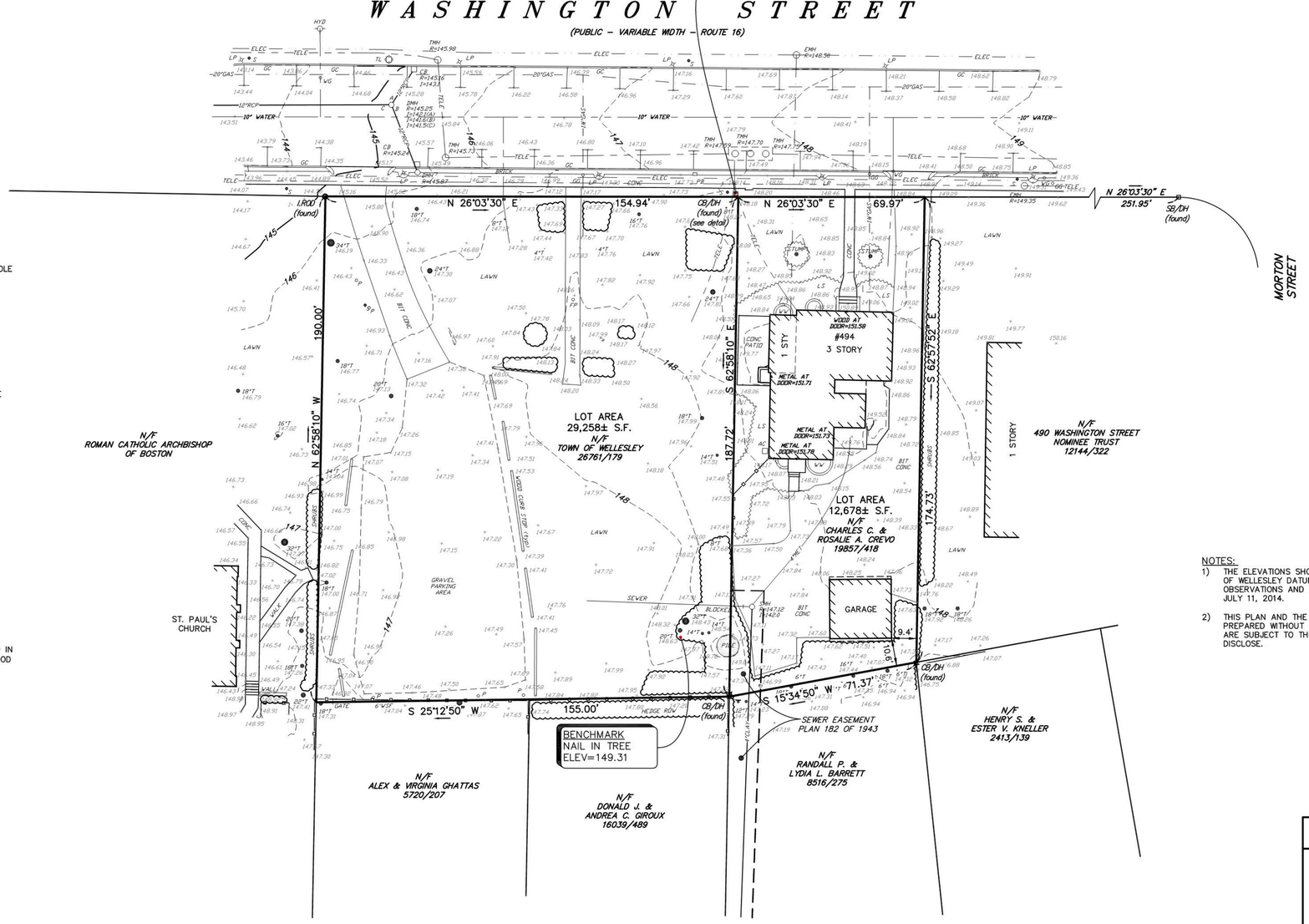

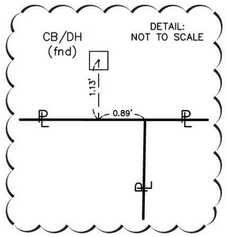

LEGEND

AC	AIR CONDITIONER
BIT CONC	BITUMINOUS CONCRETE
CB/DH	CONCRETE BOUND/DRILLHOLE
CONC	CONCRETE
DMH	DRAIN MANHOLE
ELEC	ELECTRIC LINE
GC	GRANITE CURB
GG	GAS GATE
I.ROD	IRON ROD
I=	INVERT
LP	LIGHT POLE
LS	LANDSCAPING
P	POST
PB	PULL BOX
R=	RIM
S	SIGN
SB/DH	STONE BOUND/DRILL HOLE
SMH	SEWER MANHOLE
TELE	TELEPHONE LINE
TL	TRAFFIC LIGHT
TMH	TELEPHONE MANHOLE
WG	WATER GATE
WSF	WOOD STOCKADE FENCE
WW	WINDOW WELL
24"T	24" TREE
. . . . .	OVERHEAD WIRE
~~	BRUSH/SHRUB LINE

FLOOD NOTE

THE PARCEL SHOWN HEREON IS LOCATED IN ZONE X (UNSHADED), AS SHOWN ON FLOOD INSURANCE RATE MAP No. 25021C0016E EFFECTIVE DATE JULY 17, 2012

NOTES:

1) THE ELEVATIONS SHOWN HEREON ARE BASED ON THE TOWN OF WELLESLEY DATUM, AND WERE DETERMINED BY GPS OBSERVATIONS AND AN OPUS REDUCTION PERFORMED ON JULY 11, 2014.

2) THIS PLAN AND THE SURVEY ON WHICH IT WAS BASED WERE PREPARED WITHOUT THE BENEFIT OF A TITLE REPORT AND ARE SUBJECT TO THE FINDINGS SUCH A REPORT MAY DISCLOSE.

UNDERGROUND UTILITIES WERE COMPILED FROM AVAILABLE RECORD PLANS OF UTILITY COMPANIES AND PUBLIC AGENCIES AND ARE APPROXIMATE ONLY. BEFORE DESIGN AND CONSTRUCTION CALL "DIG SAFE" 1-888-344-7233. SOME DATA IS CONFLICTING AND CAN ONLY BE VERIFIED BY EXCAVATION.

#494-496 WASHINGTON STREET

EXISTING CONDITIONS PLAN
IN
WELLESLEY, MA
(NORFOLK COUNTY)

SCALE: 1"= 20' DATE: JULY 16, 2014

0 20 40 60 80 ft

Precision Land Surveying, Inc.
32 Turnpike Road
Southborough, Massachusetts 01772
TELE NO.: (508) 460-1789 FAX NO.:(508) 970-0096

4269EC1.DWG

Catlin + Petrovick Architects PC

51 Railroad Street Suite 130
Keene, New Hampshire, 03431
(603) 352-2255

www.c-parchitect.com

	PRELIMINARY DESIGN	DATE:
	SCHEMATIC DESIGN	DATE:
	DESIGN DEVELOPMENT	DATE:
	CD'S 100%	DATE:
	BID SET	DATE:
	PERMIT SET	DATE:
	CONSTRUCTION SET	DATE:

Consultants:

CIVIL/LANDSCAPE

Devellis Zrein, Inc. (Jim DeVellis)
PO Box 307
Foxborough, MA 02035
781 771.8104 Cell
508 393.8583 Work
jim@devellis zrein.com

ELECTRICAL ENGINEER

Sam Zax Associates, LLC
14 Wood RD
Braintree, MA 02184
781 303.1700 Work
mzax@zaxengineering.com

M/P/FP ENGINEER

VAV International (Semoon Oh)
400 West Cummings Park S-4700
Worburn, MA 01801
781 935.1822
soh@vavint.com

STRUCTURAL ENGINEER

Foley Buhl Roberts & Associates, Inc.
500 Commercial Street
Manchester, NH 03101
603 622.4578 Work
603 622.4593 Fax
rroberts@fbra.com

No.	Description	Date

Project Title:

Tolles-Parsons Senior Center

496-494 Washington St
Wellesley, MA 02482

Sheet Title:

Existing Conditions Plan

THE ABOVE DRAWINGS AND SPECIFICATIONS AND IDEAS,DESIGNS AND ARRANGEMENTS REPRESENTED THEREIN ARE AND SHALL REMAIN THE PROPERTY OF THE ARCHITECT AND NO PART THEREOF SHALL BE COPIED, DISCLOSED TO OTHERS OR USED IN CONNECTION WITH ANY WORK OR PROJECT OTHER THAN THE SPECIFIED PROJECT FOR WHICH THEY HAVE BEEN PREPARED AND DEVELOPED WITHOUT THE WRITTEN CONSENT OF THE ARCHITECT VISUAL OF ACCEPTANCE OF THERE RESTRICTIONS. WRITTEN DIMENSIONS ON THESE DRAWINGS SHALL HAVE PRECEDENCE OVER SCALED DIMENSION. CONTRACTORS SHALL VERIFY, AND BE RESPONSIBLE FOR, ALL DIMENSIONS AND CONDITIONS ON THE JOB AND THIS OFFICE MUST BE NOTIFIED OF ANY VARIATIONS FROM THE DIMENSIONS AND CONDITIONS SHOWN BY THESE DRAWINGS.

Project Number:	20140018
Drawn By:	DLA
Scale:	
Print Date: 10/9/2014 10:38:33 AM	

C0

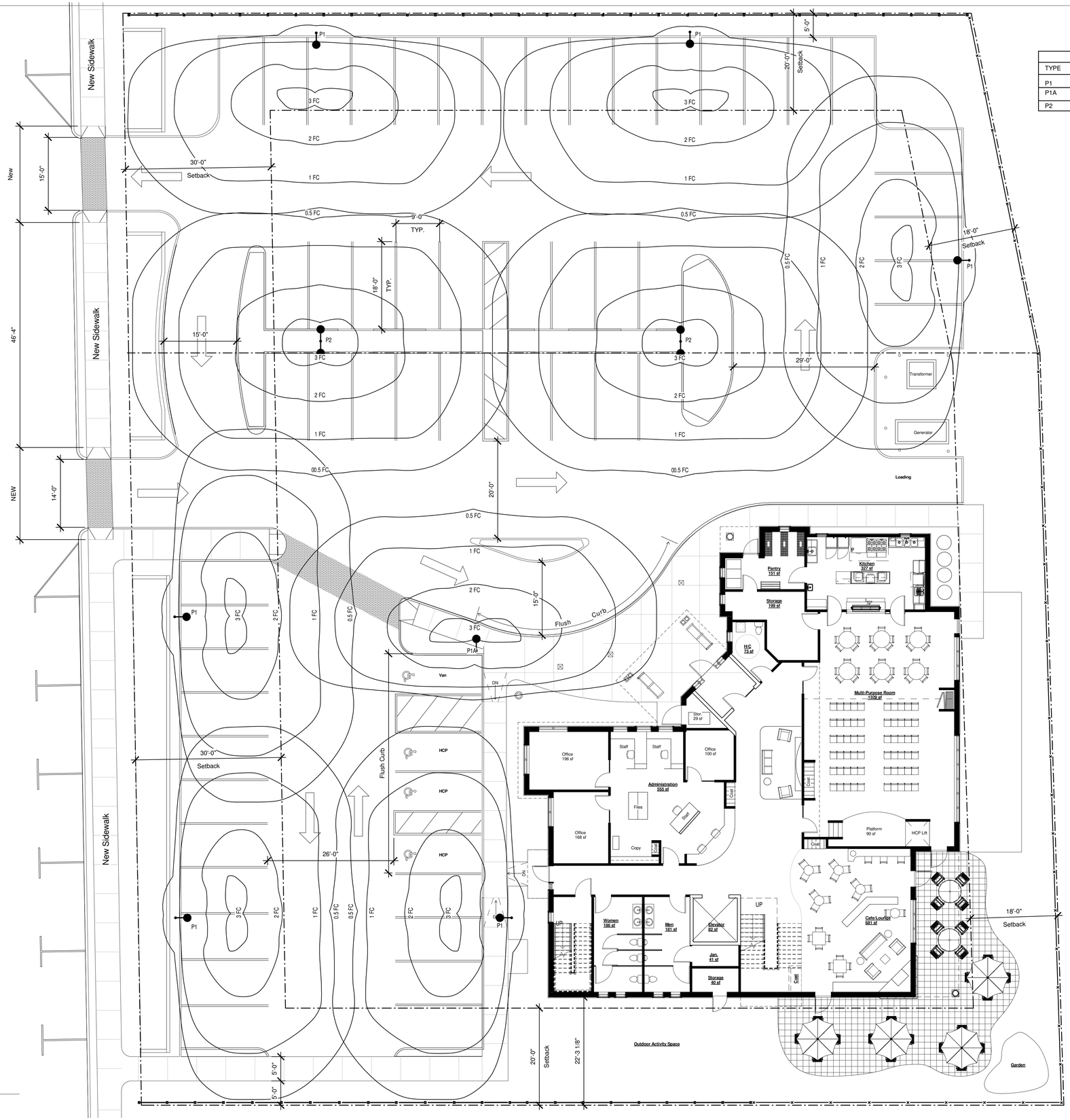

1 Site Lighting
1" = 10'-0"

LIGHTING FIXTURES				
TYPE	MANUFACTURER	ARRANGEMENT	LAMP TYPE	REMARKS
P1	GARDCO	SINGLE	96W LED	16' POLE, BLACK
P1A	GARDCO	SINGLE	96W LED	16' POLE, BLACK
P2	GARDCO	DOUBLE	96W LED	16' POLE, BLACK

Catlin + Petrovick Architects PC

51 Railroad Street Suite 130
Keene, New Hampshire, 03431
(603) 352-2255

www.c-parchitect.com

☐	PRELIMINARY DESIGN	DATE:
☐	SCHEMATIC DESIGN	DATE:
☐	DESIGN DEVELOPMENT	DATE:
☐	CD'S 100%	DATE:
☐	BID SET	DATE:
☐	PERMIT SET	DATE:
☐	CONSTRUCTION SET	DATE:

Consultants:

CIVIL/LANDSCAPE

Devellis Zrein, Inc. (Jim DeVellis)
PO Box 307
Foxborough, MA 02035
781 771.8104 Cell
508 393.8583 Work
jim@devellizrein.com

ELECTRICAL ENGINEER

Sam Zax Associates, LLC
14 Wood RD
Braintree, MA 02184
781 303.1700 Work
mzax@zaxengineering.com

M/P/FP ENGINEER

VAV International (Semoon Oh)
400 West Cummings Park S-4700
Worburn, MA 01801
781 935.1822
soh@vavint.com

STRUCTURAL ENGINEER

Foley Buhl Roberts & Associates, Inc.
500 Commercial Street
Manchester, NH 03101
603 622.4578 Work
603 622.4593 Fax
rroberts@fbra.com

No.	Description	Date

Project Title:

Tolles-Parsons Senior Center

496-494 Washington St
Wellesley, MA 02482

Sheet Title:

Site Photometric plan

THE ABOVE DRAWINGS AND SPECIFICATIONS AND IDEAS,DESIGNS AND ARRANGEMENTS REPRESENTED THEREBY ARE THE PROPERTY OF THE ARCHITECT AND ARE NOT TO BE USED IN WHOLE OR IN PART, TO BE COPIED, DISCLOSED TO OTHERS OR USED IN CONNECTION WITH ANY WORK OR PROJECT OTHER THAN THE SPECIFIED PROJECT FOR WHICH THEY HAVE BEEN PREPARED AND DEVELOPED WITHOUT THE WRITTEN CONSENT OF THE ARCHITECT. VISUAL CONTACT WITH THESE DRAWINGS OR SPECIFICATIONS SHALL CONSTITUTE PROOF OF ACCEPTANCE OF THE RESTRICTIONS. CONTRACTORS SHOULD CHECK AND VERIFY ALL DIMENSIONS AND BE RESPONSIBLE FOR ALL DIMENSIONS IN ACCORDANCE ON THE JOB AND THIS OFFICE MUST BE NOTIFIED OF ANY VARIATIONS FROM THE DIMENSIONS AND CONDITIONS SHOWN BY THESE DRAWINGS.

Project Number:	20140018
Drawn By:	DLA
Scale:	As indicated
Print Date:	10/14/2014 10:13:16 AM

C0.0

LAYOUT AND MATERIAL NOTES

1. EXISTING CONDITIONS INFORMATION IS REPRODUCED FROM THE SURVEY PREPARED BY PRECISION LAND SURVEY OF SOUTHBOROUGH, MASSACHUSETTS AND IS DATED 16 JULY 2014.
2. THE LOCATIONS OF UNDERGROUND UTILITIES SHOWN ARE BASED ON THE SURVEY REFERENCED ABOVE. THE CONTRACTOR SHALL NOTIFY DIGSAFE AND THE PROPER LOCAL AUTHORITIES OR RESPECTIVE UTILITY COMPANIES TO CONFIRM THE LOCATION OF ALL EXISTING UTILITIES BEFORE COMMENCING WORK. ANY DAMAGE DUE TO FAILURE OF THE CONTRACTOR TO CONTACT THE PROPER AUTHORITIES SHALL BE BORNE BY THE CONTRACTOR.
3. CONTRACTOR(s) SHALL THOROUGHLY FAMILIARIZE THEMSELVES WITH ALL CONSTRUCTION DOCUMENTS, SPECIFICATIONS, AND SITE CONDITIONS PRIOR TO BIDDING AND PRIOR TO CONSTRUCTION.
4. ANY DISCREPANCIES BETWEEN DRAWINGS, SPECIFICATIONS, AND SITE CONDITIONS SHALL BE REPORTED IMMEDIATELY TO THE OWNER'S REPRESENTATIVE FOR CLARIFICATION AND RESOLUTION PRIOR TO BIDDING OR CONSTRUCTION.
5. ALL WORK CONDUCTED WITHIN PUBLIC RIGHT-OF-WAYS SHALL CONFORM TO THE REQUIREMENTS AND SPECIFICATIONS OF THE TOWN OF WELLESLEY.
6. SEE ARCHITECTURAL DRAWINGS FOR EXACT BUILDING DIMENSIONS AND ALL DETAILS CONTIGUOUS TO THE BUILDING, INCLUDING SIDEWALKS, RAMPS, UTILITY ENTRANCE LOCATIONS, WALL PACKS, CONCRETE DOOR PADS, ROOF DRAINS, ETC.
7. ACCESSIBLE CURB RAMPS SHALL BE PER THE MASSACHUSETTS ARCHITECTURAL ACCESS BOARD (AAB) AND THE AMERICANS WITH DISABILITIES ACT (ADA) ACCESSIBILITY GUIDELINES, WHICHEVER IS MORE STRINGENT.
8. THE FOLLOWING LAYOUT CRITERIA SHALL CONTROL UNLESS OTHERWISE NOTED ON THE PLAN:
   ALL DIMENSIONS ARE TO OUTSIDE FACE OF BUILDING.
   ALL DIMENSIONS ARE TO FACE OF CURB AT GUTTER LINE.
   ALL DIMENSIONS ARE TO CENTER OF PAVEMENT MARKINGS.
   ALL TIES TO PROPERTY LINES ARE PERPENDICULAR TO THE PROPERTY LINE UNLESS
   OTHERWISE NOTED.
9. FOR LAYOUT AND DIMENSIONING OF BUILDINGS, SEE ARCHITECTURAL DRAWINGS.
10. SCREENED IMAGES SHOW EXISTING CONDITIONS. WHERE EXISTING CONDITIONS LIE UNDER OR ARE IMPINGED UPON BY PROPOSED BUILDINGS AND/OR SITE ELEMENTS, THE EXISTING CONDITION WILL BE REMOVED, ABANDONED AND/OR CAPPED OR DEMOLISHED AS REQUIRED.

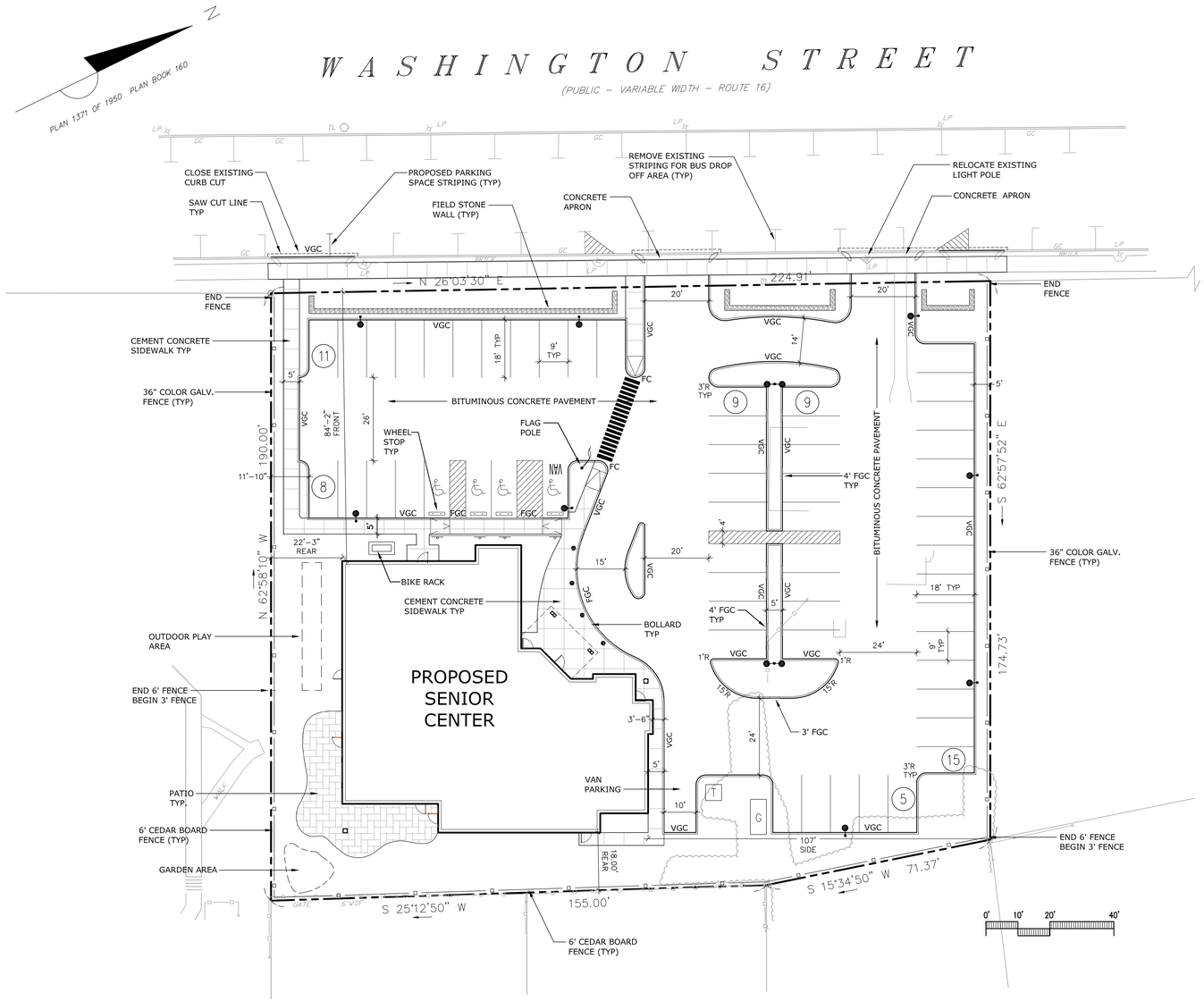

LEGEND

	PROPERTY LINE
	SITE LIGHTING
	WALKWAY LIGHTING
	SPECIALTY PAVEMENT
	CEMENT CONCRETE PAVEMENT
VGC	VERTICAL GRANITE CURB
FGC	FLUSH GRANITE CURB
FCC	FLUSH CONCRETE CURB
ICC	INTERGRAL CONCRETE CURB
	FLAGPOLE WITH UPLIGHTS
	FENCE
12	PARKING COUNT

Catlin + Petrovick Architects PC

51 Railroad Street Suite 130
Keene, New Hampshire, 03431
(603) 352-2255

www.c-parchitect.com

☐	PRELIMINARY DESIGN	DATE:
☐	SCHEMATIC DESIGN	DATE:
☐	DESIGN DEVELOPMENT	DATE:
☐	CD'S 100%	DATE:
☐	BID SET	DATE:
☐	PERMIT SET	DATE: 10.14.14
☐	CONSTRUCTION SET	DATE:

Consultants:

CIVIL/LANDSCAPE

DZI Land Planning, Civil Engineering, Landscape Architecture
Po Box 307
Foxborough, MA
www.devellszrein.com
tel. 508.473.4114

DeVellis Zrein Inc.

ELECTRICAL ENGINEER

Sam Zax Associates, LLC
14 Wood RD
Braintree, MA 02184
781 303.1700 Work
mzax@zaxengineering.com

M/P/FP ENGINEER

VAV International (Semoon Oh)
400 West Cummings Park S-4700
Worburn, MA 01801
781 935.1822
soh@vavlnt.com

STRUCTURAL ENGINEER

Foley Buhl Roberts & Associates, Inc.
500 Commercial Street
Manchester, NH 03101
603 622.4578 Work
603 622.4593 Fax
rroberts@fbra.com

No.	Description	Date

Project Title:

Tolles-Parsons Senior Center

496-494 Washington St
Wellesley, MA 02482

Sheet Title:

LAYOUT AND MATERIALS PLAN

THE ABOVE DRAWINGS AND SPECIFICATIONS AND IDEAS,DESIGNS AND ARRANGEMENTS REPRESENTED THEREBY ARE AND SHALL REMAIN THE PROPERTY OF THE ARCHITECT AND NO PART THEREOF SHALL BE USED FOR ANY PURPOSE NOT SPECIFICALLY AGREED TO IN WRITING BY THE ARCHITECT FOR USE ON THE SPECIFIED PROJECT FOR WHICH THEY HAVE BEEN PREPARED AND DEVELOPED WITHOUT THE WRITTEN CONSENT OF THE ARCHITECT VISUAL OF ACCEPTANCE OF THRRE RESTRICTIONS. WRITTEN DIMENSIONS ON THESE DRAWINGS SHALL HAVE PRECEDENCE OVER SCALED DIMENSION. CONTRACTORS SHALL VERIFY AND BE RESPONSIBLE FOR, ALL DIMENSIONS AND CONDITIONS ON THE JOB AND THIS OFFICE MUST BE NOTIFIED OF ANY VARIATIONS FROM THE DIMENSIONS AND CONDITIONS SHOWN BY THESE DRAWINGS.

Project Number:	20140018
Drawn By:	IAZ
Scale:	1" = 20'

C-1

GRADING AND UTILITY NOTES

1. EXISTING CONDITIONS INFORMATION IS REPRODUCED FROM THE SURVEY PREPARED BY PRECISION LAND SURVEY OF SOUTHBOROUGH, MA AND IS DATED 16 JULY 2014.
2. PRIOR TO THE START OF ANY EXCAVATION FOR THE PROJECT, BOTH ON AND OFF THE SITE, THE CONTRACTOR SHALL NOTIFY DIGSAFE AND BE PROVIDED WITH A DIGSAFE NUMBER INDICATING THAT ALL EXISTING UTILITIES HAVE BEEN LOCATED AND MARKED.
3. CONTRACTOR TO ADJUST UTILITY ELEMENT MEANT TO BE FLUSH WITH GRADE (CLEAN-OUTS, UTILITY MANHOLES, CATCH BASINS, INLETS, ETC.) THAT IS AFFECTED BY SITE WORK OR GRADE CHANGES, WHETHER SPECIFICALLY NOTED ON PLANS OR NOT.
4. ALL CONSTRUCTION TO BE DONE IN ACCORDANCE WITH TOWN OF WELLESLEY DEPARTMENT OF PUBLIC WORKS STANDARDS.
5. THE LOCATIONS OF EXISTING UNDERGROUND UTILITIES ARE SHOWN IN AN APPROXIMATE WAY ONLY AND HAVE NOT BEEN INDEPENDENTLY VERIFIED BY THE OWNER OR ITS REPRESENTATIVE. THE CONTRACTOR SHALL DETERMINE THE EXACT LOCATION OF ALL EXISTING UTILITIES BEFORE COMMENCING WORK, AND AGREES TO BE FULLY RESPONSIBLE FOR ANY AND ALL DAMAGES WHICH MAY BE OCCASIONED BY THE CONTRACTOR'S FAILURE TO EXACTLY LOCATE AND PRESERVE ALL UNDERGROUND UTILITIES.
6. WHERE AN EXISTING UTILITY IS FOUND TO CONFLICT WITH THE PROPOSED WORK, THE LOCATION, ELEVATION, AND SIZE OF THE UTILITY SHALL BE ACCURATELY DETERMINED WITHOUT DELAY BY THE CONTRACTOR, AND THE INFORMATION FURNISHED TO THE ENGINEER FOR RESOLUTION OF THE CONFLICT.
7. THE CONTRACTOR SHALL ALTER THE MASONRY OF THE TOP SECTION OF ALL EXISTING DRAINAGE STRUCTURES AS NECESSARY FOR CHANGES IN GRADE, AND RESET ALL WATER AND DRAINAGE FRAMES, GRATES, AND BOXES TO THE PROPOSED FINISH SURFACE GRADE.
8. THE CONTRACTOR SHALL MAKE ALL ARRANGEMENTS FOR THE ALTERATION AND ADJUSTMENT OF ALL GAS, ELECTRIC, TELEPHONE, AND ANY OTHER PRIVATE UTILITIES BY THE UTILITY COMPANIES.
9. CONTRACTOR SHALL MAINTAIN, OR ADJUST TO NEW FINISH GRADE, AS NECESSARY ALL UTILITY AND SITE STRUCTURES SUCH AS: LIGHT POLES, SIGN POLES, MANHOLES, CATCH BASINS, HAND HOLES, WATER AND GAS GATES, HYDRANTS, ETC., FROM MAINTAINED UTILITY AND SITE SYSTEMS, UNLESS OTHERWISE NOTED OR DIRECTED BY OWNER'S REPRESENTATIVE.
10. ALL SEWER PIPES SHALL BE PVC PER ASTM D3034, SDR-35 AND ASTM D1784 WITH RUBBER GASKET JOINTS.
11. SITE LIGHTING IS SHOWN ON THIS PLAN FOR COORDINATION PURPOSES ONLY. REFER TO ELECTRICAL PLANS FOR EXACT TYPE AND LOCATION.
12. REFER TO ELECTRICAL PLANS FOR SECTIONS AND DETAILS OF THE UTILITY DUCT BANK.
13. AREAS OUTSIDE THE LIMITS OF PROPOSED WORK DISTURBED BY THE CONTRACTOR'S OPERATIONS SHALL BE RESTORED BY THE CONTRACTOR TO THEIR ORIGINAL CONDITION, AT THE CONTRACTOR'S EXPENSE.
14. REFER TO ARCHITECTURAL PLANS FOR PROPOSED LOCATION OF UTILITY SERVICE STUBS AT BUILDING.
15. THE LOCATION, SIZE, DEPTH, AND SPECIFICATIONS FOR CONSTRUCTION OF PRIVATE UTILITY SERVICES SHALL BE INSTALLED ACCORDING TO THE REQUIREMENTS PROVIDED BY, AND APPROVED BY, THE RESPECTIVE UTILITY COMPANY (GAS, TELEPHONE, ELECTRICAL.) FINAL DESIGN AND LOCATIONS AT THE BUILDING WILL BE PROVIDED BY THE ARCHITECT. THE CONTRACTOR SHALL COORDINATE THE INSTALLATION OF THE UTILITY CONNECTIONS WITH THE RESPECTIVE COMPANIES PRIOR TO ANY UTILITY CONSTRUCTION.
16. ALL CEMENT LINED DUCTILE IRON JOINTS AT FITTINGS (CLASS 52.) VALVES, AND HYDRANT LATERALS SHALL BE MECHANICAL JOINT WITH NEOPRENE GASKETS. JOINTS AT OTHER LOCATIONS SHALL BE PUSH-ON TYPE WITH NEOPRENE OR SYNTHETIC RUBBER GASKETS. ALL WATER GATES SHALL OPEN AS PER CITY REQUIREMENTS. ALL WATER LINES SHALL HAVE A MINIMUM OF 5.0 FEET OF GROUND COVER AND A MINIMUM OF 10 FOOT SEPARATION FROM THE SEWER SYSTEM. AT WATER AND SEWER CROSSINGS, THE WATER LINE SHALL BE ENCASED IN SIX INCHES OF CONCRETE FOR A DISTANCE OF 10 FEET ON EITHER SIDE OF THE CROSSING.
17. WHERE PROPOSED GRADES MEET EXISTING GRADES, CONTRACTOR SHALL BLEND GRADES TO PROVIDE A SMOOTH TRANSITION BETWEEN EXISTING AND NEW WORK. PONDING AT TRANSITION AREAS WILL NOT BE ALLOWED.
18. CONTRACTOR SHALL MAINTAIN POSITIVE DRAINAGE AWAY FROM ALL BUILDING FOUNDATIONS, STRUCTURES AND PLANTING BEDS.
19. MAXIMUM SLOPE IN DISTURBED AREAS SHALL NOT EXCEED 3:1, UNLESS OTHERWISE NOTED.
20. ENSURE ALL EXISTING (TO REMAIN), AND PROPOSED MANHOLE COVERS PROPERLY IDENTIFY UTILITY SERVICED.
21. CONTRACTOR SHALL VERIFY EXISTING GRADES AND NOTIFY OWNER'S REPRESENTATIVE OF ANY DISCREPANCIES.
22. BITUMINOUS CONCRETE ELEVATIONS AT CATCH BASINS TO BE 1/4 INCH ABOVE RIM ELEVATION SHOWN FOR CATCH.
23. SCREENED IMAGES SHOW EXISTING CONDITIONS. WHERE EXISTING CONDITIONS LIE UNDER OR ARE IMPINGED UPON BY PROPOSED BUILDINGS AND/OR SITE ELEMENTS, THE EXISTING CONDITION WILL BE REMOVED, ABANDONED AND/OR CAPPED OR DEMOLISHED AS REQUIRED.

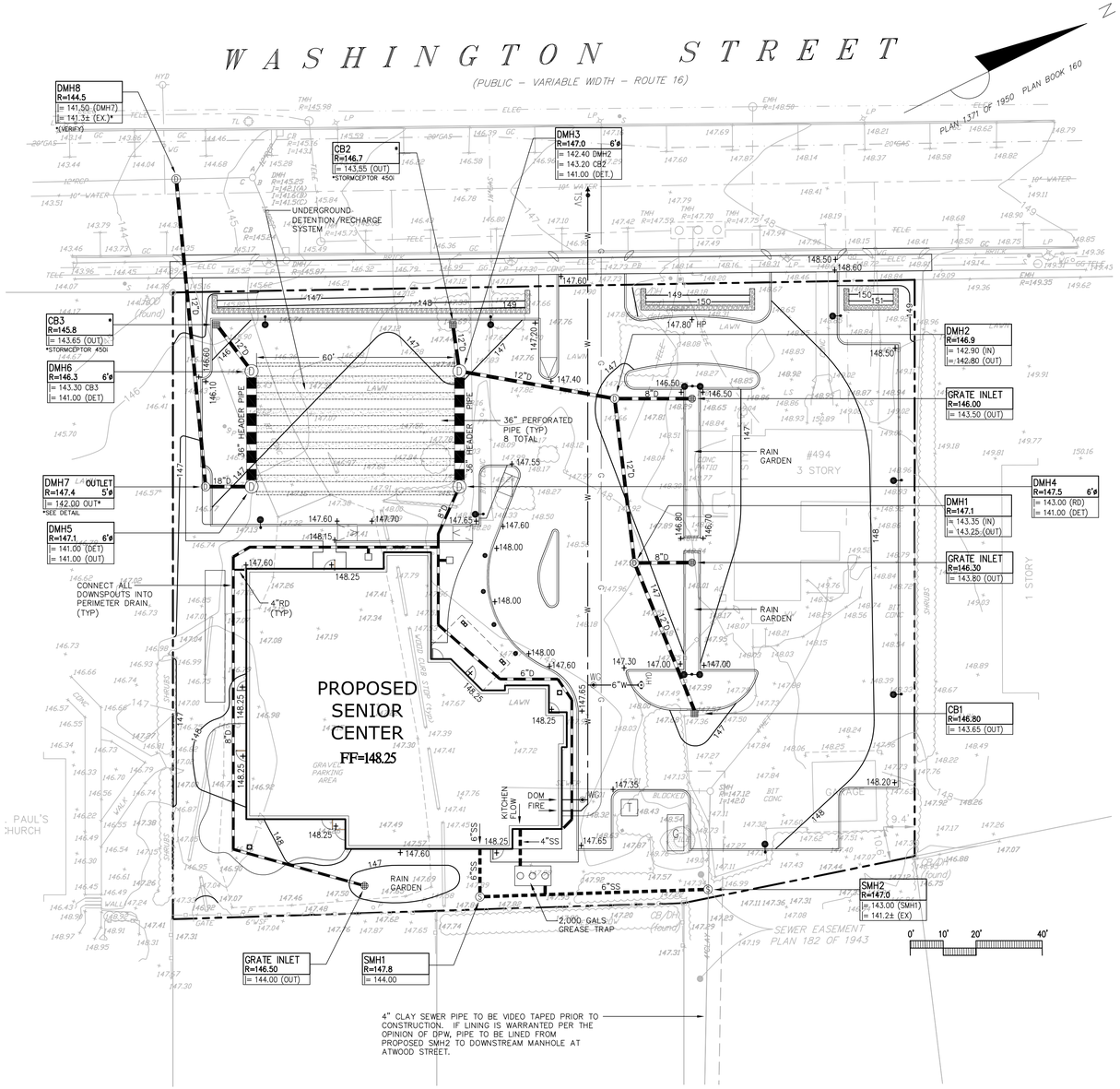

GRADING AND UTILITY LEGEND

	PROPERTY LINE
	SEWER LINE
	DRAIN LINE
W	WATER LINE
G	GAS LINE
UG-E/T/FA	UNDERGROUND ELECTRIC, TELEPHONE, FIRE ALARM
112	PROPOSED CONTOUR LINE
+100.50	SPOTGRADE
	CATCHBASIN
AD	AREA DRAIN
GI	GRATE INLET
D	DRAIN MANHOLE
S	SEWER MANHOLE
WG	WATER GATE
HYD	HYDRANT
TSV	TAPPING SLEEVE AND VALVE
T	TRANSFORMER
	CLEAN OUT
RD	ROOF DRAIN

Catlin + Petrovick Architects PC

51 Railroad Street Suite 130
Keene, New Hampshire, 03431
(603) 352-2255

www.c-parchitect.com

	PRELIMINARY DESIGN	DATE:
	SCHEMATIC DESIGN	DATE:
	DESIGN DEVELOPMENT	DATE:
	CD'S 100%	DATE:
	BID SET	DATE:
	PERMIT SET	DATE: 10.14.14
	CONSTRUCTION SET	DATE:

Consultants:

CIVIL/LANDSCAPE

DZI Land Planning, Civil Engineering, Landscape Architecture
Po Box 307
Foxborough, MA
www.devellizrein.com
tel. 508.473.4114

DeVellis Zrein Inc.

ELECTRICAL ENGINEER

Sam Zax Associates, LLC
14 Wood RD
Braintree, MA 02184
781 303.1700 Work
mzax@zaxengineering.com

M/P/FP ENGINEER

VAV International (Semoon Oh)
400 West Cummings Park S-4700
Worburn, MA 01801
781 935.1822
soh@vavint.com

STRUCTURAL ENGINEER

Foley Buhl Roberts & Associates, Inc.
500 Commercial Street
Manchester, NH 03101
603 622.4578 Work
603 622.4593 Fax
rroberts@fbra.com

No.	Description	Date

Project Title:

Tolles-Parsons Senior Center

496-494 Washington St
Wellesley, MA 02482

Sheet Title:

GRADING AND UTILITIES PLAN

THE ABOVE DRAWINGS AND SPECIFICATIONS AND IDEAS,DESIGNS AND ARRANGEMENTS REPRESENTED THEREBY ARE AND SHALL REMAIN THE PROPERTY OF THE ARCHITECT AND NO PART, THEREOF SHALL BE SHOWN TO OTHERS OR REPRODUCED, PATENTED OR PUBLISHED WITHOUT THE WRITTEN CONSENT OF THE ARCHITECT. THEY WERE PREPARED AND DEVELOPED FOR USE ON THE SPECIFIED PROJECT FOR WHICH THEY HAVE BEEN PREPARED AND DEVELOPED WITHOUT THE WRITTEN CONSENT OF THE ARCHITECT VISUAL OF ACCEPTANCE OF THERE RESTRICTIONS. WRITTEN DIMENSIONS ON THESE DRAWINGS SHALL HAVE PRECEDENCE OVER SCALED DIMENSION CONTRACTORS SHALL VERIFY, AND BE RESPONSIBLE FOR, ALL DIMENSIONS AND CONDITIONS ON THE JOB AND THE ARCHITECT SHALL BE NOTIFIED OF ANY VARIATIONS FROM THE DIMENSIONS AND CONDITIONS SHOWN BY THESE DRAWINGS.

Project Number:	20140018
Drawn By:	IAZ
Scale:	1" = 20'

C-2

TREE MITIGATION

TREES TO BE REMOVED IN TREE YARD = 68 INCHES AT DBH
34" OF CALIPER RECOMMENDED TO MITIGATE REMOVAL
57" CALIPER INCHES PROVIDED IN PARKING LOT TREE PLANTINGS.

REQUIRED TREE PROTECTION SPECIFICATIONS TO BE PREPARED BY A MASSACHUSETTS CERTIFIED ARBORIST.

PLANT SCHEDULE

SYMBOL	BOTANICAL NAME	COMMON NAME	QTY	SIZE	COMMENT
DECIDUOUS TREES					
AR	ACER RUBRUM 'OCTOBER GLORY'	OCTOBER GLORY MAPLE		3 -3 1/2" CAL.	
GT	GLEDITSIA TRIACANTHOS 'INERMIS'	THORNLESS HONEYLOCUST		3 -3 1/2" CAL.	
ORNAMENTAL TREES					
BJ	BETULA UTILIS VAR. JACQUEMONTI	JACQUEMONTI BIRCH		7-8' HT.	TRIPLE CLUMP
CK	CORNUS KOUSA	KOUSA DOGWOOD		7-8' HT.	
EVERGREEN TREES					
PN	PINUS NIGRA 'AUSTRIACA'	AUSTRIAN PINE		6-8' HT.	
TP	THUJA PLICATUM	WESTERN ABORVITAE		5-6' ht.	
RAIN GARDEN SHRUBS					
AV	AZALEA VISCOSUM	SWAMP AZALEA		18-24"	RG
CA	CLEHTERA ALNIFOLIA	SUMMERSWEET		18-24"	RG
VA	VACCINIUM AUGUSTOFOLIA	LOW BUSH BLUEBERRY		18-24"	RG
VC	VACCINIUM CORYUMBUS	HIGH BUSH BLUEBERRY		18-24"	RG
SHRUBS					
BS	BUXUS SEMPERVIRENS	COMMON BOXWOOD		24-36"	
IM	ILEX MESERVAE 'BLUE PRINCESS'	BLUE PRINCESS HOLLY		30-36"	
LV	LIGUSTRUM VULGARE	COMMON PRIVET		4-5'	
HM	HYDRANGEA MARCOPHYLA 'ENDLESS SUMMER'	ENDLESS SUMMER HYDRANGEA		24-36"	
PERENNIALS AND SEDGES RAIN GARDEN					
CA	CAREX SP.	ASSORTED CAREX		1 GAL.	RG
IA	IRIS SP.	ASSORTED IRIS BLUEFLY, SLENDER AND LOUSIANA		1 GAL.	RG
HH	HEMEROCALLS SP.	HAPPY RETURNS DAYLILY		1 GAL.	
PA	PEROVSKIA ATRIPLIFOLIA	RUSSIAN SAGE		1 GAL.	
VM	VINCA MINOR	COMMON MYRTLE		4" POTS	

RG- INDICATES PLANTS TO BE USED IN THE RAIN GARDEN

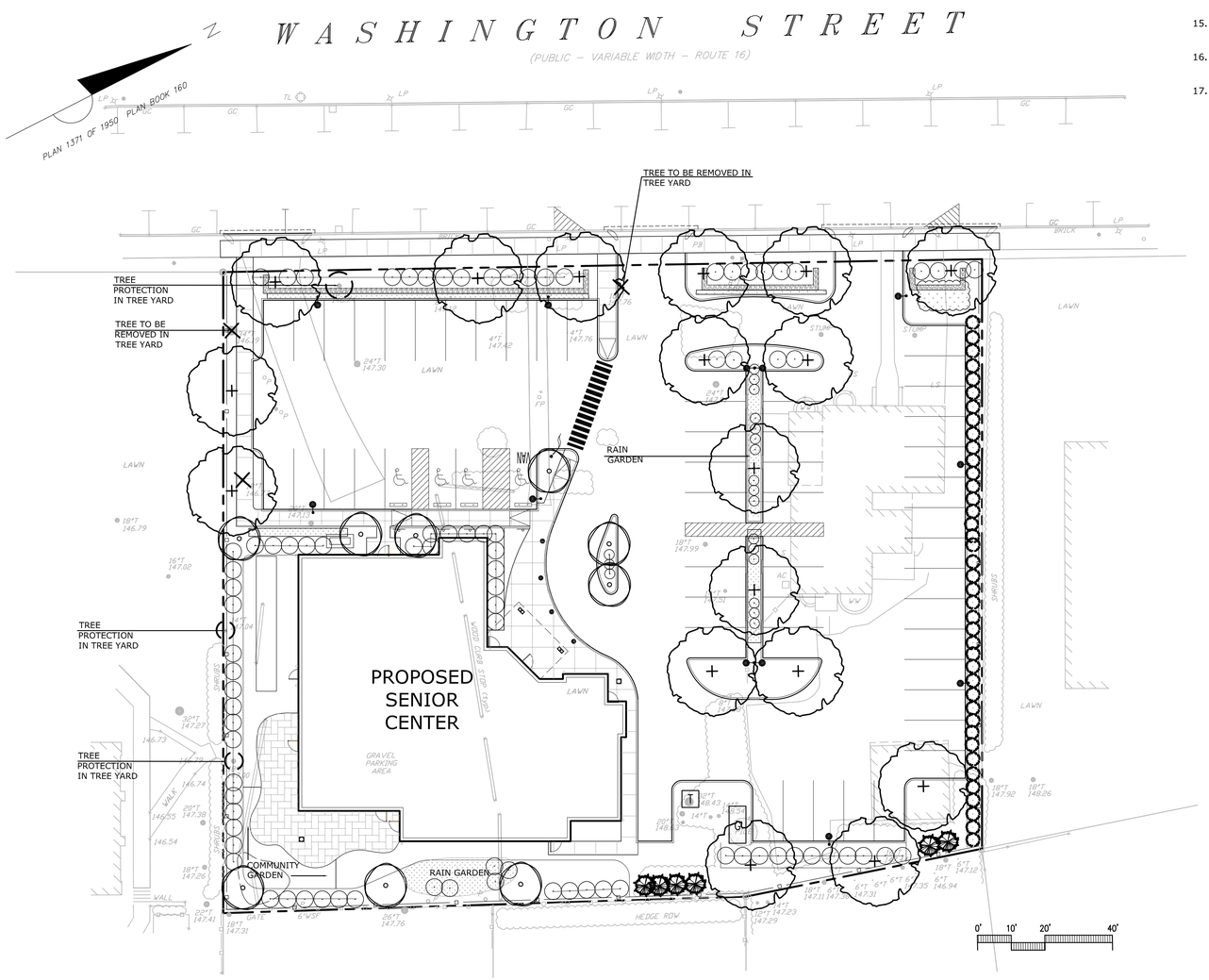

PLANTING NOTES

1. EXISTING CONDITIONS INFORMATION IS REPRODUCED FROM THE SURVEY PREPARED BY PRECISION LAND SURVEY, OF SOUTHBOROUGH, MA, DATED 16 JULY 2014.
2. THE LOCATIONS OF UNDERGROUND UTILITIES SHOWN ARE BASED ON THE SURVEY REFERENCED ABOVE. THE CONTRACTOR SHALL CONTACT DIGSAFE AND THE PROPER LOCAL AUTHORITIES OR RESPECTIVE UTILITY COMPANIES TO CONFIRM THE LOCATION OF ALL EXISTING UTILITIES BEFORE COMMENCING WORK. ANY DAMAGE DUE TO FAILURE OF THE CONTRACTOR TO CONTACT THE PROPER AUTHORITIES SHALL BE BORNE BY THE CONTRACTOR.
3. CONTRACTOR SHALL BEGIN MAINTENANCE IMMEDIATELY AFTER PLANTING AND WILL CONTINUE UNTIL FINAL WRITTEN ACCEPTANCE OF PLANT MATERIAL.
4. LANDSCAPE ARCHITECT TO FLAG ALL TREES TO BE TRANSPLANTED PRIOR TO CONSTRUCTION START.
5. CONTRACTOR SHALL VERIFY ALL TREE REMOVALS AND/OR TRANSPLANTS WITH OWNER'S REPRESENTATIVE PRIOR TO CONSTRUCTION START.
6. CONTRACTOR SHALL MAINTAIN POSITIVE DRAINAGE AWAY FROM ALL BUILDING FOUNDATIONS, STRUCTURES, AND PLANTING BEDS.
7. MAXIMUM SLOPE WITHIN DISTURBED AREAS SHALL NOT EXCEED 3:1, UNLESS OTHERWISE NOTED.
8. THE LANDSCAPE CONTRACTOR SHALL SUPPLY ALL PLANT MATERIALS IN QUANTITIES SUFFICIENT TO COMPLETE ALL PLANTINGS SHOWN ON THIS DRAWING.
9. ALL MATERIALS SHALL CONFORM TO THE GUIDELINES ESTABLISHED BY THE AMERICAN NURSERY AND LANDSCAPE ASSOCIATION.
10. ALL PLANTS SHALL BEAR THE SAME RELATIONSHIP TO FINISH GRADE AS TO ORIGINAL GRADES BEFORE DIGGING.
11. ALL PLANTS TO BE BALLED IN BURLAP OR CONTAINERIZED.
12. MULCH FOR PLANTED AREAS TO BE AGED PINE BARK: PARTIALLY DECOMPOSED, DARK BROWN IN COLOR AND FREE OF WOOD CHIPS THICKER THAN 1/4 INCH.
13. PLANTING SOIL MIX: LOAM THOROUGHLY INCORPORATED WITH ROTTED MANURE PROPORTIONED 5 C.Y. TO 1 C.Y. OR EQUIVALENT. FERTILIZER ADDED PER RECOMMENDED RATES OF SOILS ANALYSIS.
14. THE LANDSCAPE CONTRACTOR SHALL GUARANTEE ALL PLANT MATERIALS FOR ONE (1) FULL YEAR FROM DATE OF ACCEPTANCE.
15. ALL PLANT MATERIALS ARE SUBJECT TO THE APPROVAL OF THE LANDSCAPE ARCHITECT, AT THE NURSERY, AND AT THE SITE.
16. ALL AREAS OF THE SITE WHICH HAVE BEEN DISTURBED AND NOT OTHERWISE DEVELOPED SHALL BE LOAMED AND SEEDED WITH A MINIMUM DEPTH OF 6" DEPTH TOPSOIL.
17. PLANT SPECIES AS INDICATED IN THE PLANT LIST ARE SUGGESTIONS ONLY. FINAL SELECTION OF SPECIES SHALL OCCUR AT THE TIME OF PLANT PURCHASE, DEPENDING ON AVAILABILITY. PLANT SIZE AND QUANTITY SHALL NOT CHANGE WITHOUT APPROVAL OF OWNER'S REPRESENTATIVE.

PLANTING LEGEND

- PROPERTY LINE
- TREE REMOVAL IN TREE YARD
- TREE PROTECTION IN TREE YARD
- GROUNDCOVER / PERENNIAL PLANTING
- SHRUB PLANTING
- ORNAMENTAL TREE
- EVERGREEN TREE
- DECIDUOUS TREE

Catlin + Petrovick Architects PC

51 Railroad Street Suite 130
Keene, New Hampshire, 03431
(603) 352-2255

www.c-parchitect.com

☐	PRELIMINARY DESIGN	DATE:
☐	SCHEMATIC DESIGN	DATE:
☐	DESIGN DEVELOPMENT	DATE:
☐	CD'S 100%	DATE:
☐	BID SET	DATE:
☐	PERMIT SET	DATE: 10.14.14
☐	CONSTRUCTION SET	DATE:

Consultants:

CIVIL/LANDSCAPE

DeVellis Zrein Inc.
Land Planning, Civil Engineering, Landscape Architecture
Po Box 307
Foxborough, MA
www.devellizrein.com
tel. 508.473.4114

ELECTRICAL ENGINEER

Sam Zax Associates, LLC
14 Wood RD
Braintree, MA 02184
781 303.1700 Work
mzax@zaxengineering.com

M/P/FP ENGINEER

VAV International (Semoon Oh)
400 West Cummings Park S-4700
Worburn, MA 01801
781 935.1822
soh@vavint.com

STRUCTURAL ENGINEER

Foley Buhl Roberts & Associates, Inc.
500 Commercial Street
Manchester, NH 03101
603 622.4578 Work
603 622.4593 Fax
rroberts@fbra.com

No.	Description	Date

Project Title:

Tolles-Parsons Senior Center

496-494 Washington St
Wellesley, MA 02482

Sheet Title:

PLANTING PLAN

THE ABOVE DRAWINGS AND SPECIFICATIONS AND IDEAS,DESIGNS AND ARRANGEMENTS REPRESENTED THEREBY ARE AND SHALL REMAIN THE PROPERTY OF THE ARCHITECT AND NO PART THEREOF SHALL BE COPIED, DISCLOSED TO OTHERS OR USED IN CONNECTION WITH ANY WORK OR PROJECT OTHER THAN THE SPECIFIC PROJECT FOR WHICH THEY HAVE BEEN PREPARED AND DEVELOPED WITHOUT THE WRITTEN CONSENT OF THE ARCHITECT.VISUAL OR ACCEPTANCE OF THESE RESTRICTIONS. WRITTEN DIMENSIONS ON THESE DRAWINGS SHALL HAVE PRECEDENCE OVER SCALED DIMENSION. CONTRACTORS SHALL VERIFY AND BE RESPONSIBLE FOR ALL DIMENSIONS AND CONDITIONS ON THE JOB AND THIS OFFICE MUST BE NOTIFIED OF ANY VARIATIONS FROM THE DIMENSIONS AND CONDITIONS SHOWN BY THESE DRAWINGS.

Project Number:	20140018
Drawn By:	IAZ
Scale:	1" = 20'

C-3

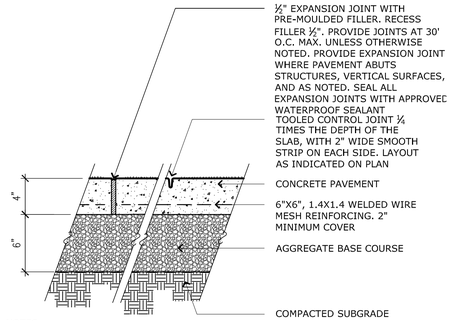

NOTES:

PROVIDE LIGHT BROOM FINISH PERPENDICULAR TO THE TRAFFIC FLOW UNLESS OTHERWISE NOTED

CEMENT CONCRETE SIDEWALK

NTS

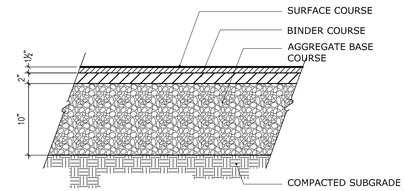

BITUMINUOUS CONCRETE PAVEMENT

NTS

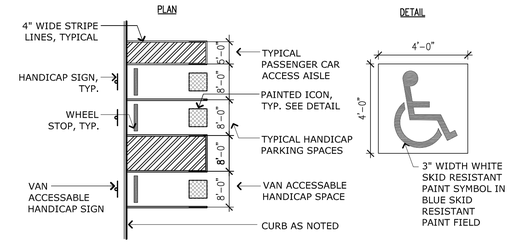

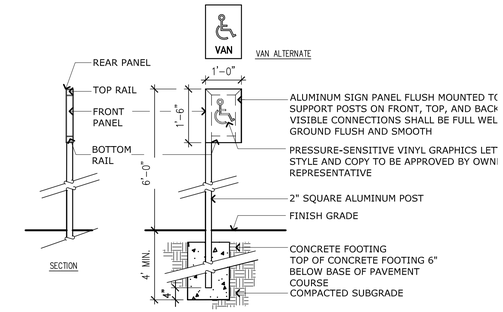

HANDICAP PARKING LAYOUT AND SIGN

NTS

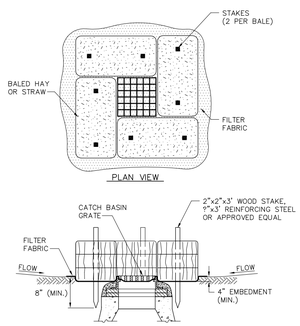

NOTES:

1. ENCLOSE STRUCTURE WITH HAYBALES IMMEDIATLY AFTER CATCH BASIN CONSTRUCTION. MAINTAIN UNTIL PAVING BINDER COURSE IS COMPLETE OR A PERMANENT STAND OF GRASS HAS BEEN ESTABLISHED.
2. IF GRATE IS AGAINST EXISTING CURB THEN HAYBALES ARE TO PLACED AROUND THREE SIDES OF GRATE ONLY.
3. WHEN STAKES MUST BE DRIVEN INTO PAVEMENT THE CONTRACTOR SHALL USE REINFORCING STEEL STAKES OR DRILL HOLES.
4. GRATE TO PLACED OVER FILTER FABRIC.
5. BALES SHALL BE INSPECTED PERIODICALLY AND AFTER ALL STORM EVENTS AND REPAIR OR REPLACEMENT SHALL BE PERFORMED **PROMPTLY AS NEEDED.**

CATCH BASIN SEDIMENT TRAP

NTS

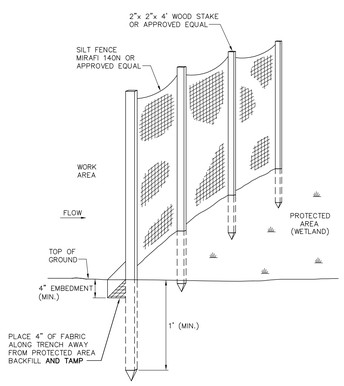

SILT FENCE BARRIER

NTS

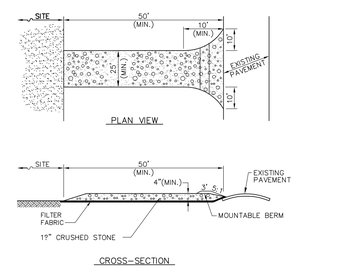

NOTES:

1. ENTRANCE WIDTH SHALL BE A TWENTY-FIVE (25) FOOT MINIMUM, BUT NOT LESS THAN THE FULL WIDTH AT POINTS WHERE INGRESS OR EGRESS OCCURS.
2. THE ENTRANCE SHALL BE MAINTAINED IN A CONDITION WHICH SHALL PREVENT TRACKING OR FLOWING OF SEDIMENT ONTO PUBLIC RIGHTS-OF-WAY. THIS MAY REQUIRE PERIODIC TOP DRESSING WITH ADDITIONAL STONE AS CONDITIONS DEMAND AND REPAIR OR CLEANOUT OF ANY MEASURES USED TO TRAP SEDIMENT. ALL SEDIMENT SPILLED, DROPPED, WASHED OR TRACKED ONTO PUBLIC RIGHTS-OF-WAY MUST BE REMOVED IMMEDIATELY. BERM SHALL BE PERMITTED. PERIODIC INSPECTION AND MAINTENANCE SHALL BE PROVIDED AS NEEDED.

STABILIZED CONSTRUCTION ENTRANCE

NTS

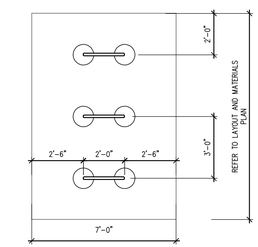

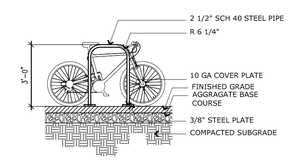

BIKE RACK

NTS

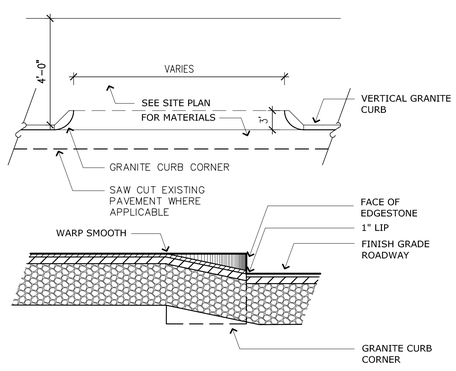

DRIVEWAY APRON

NTS

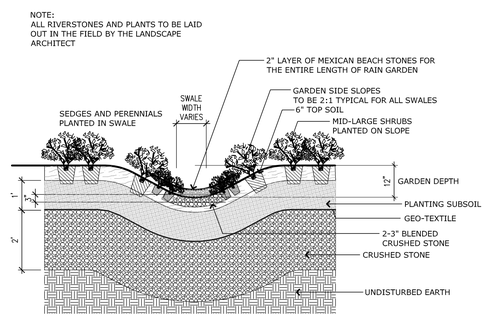

RAIN GARDEN SECTION

NTS

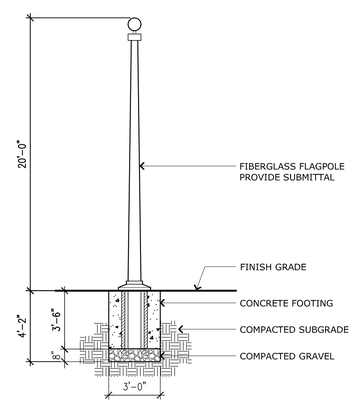

FLAG POLE

NTS

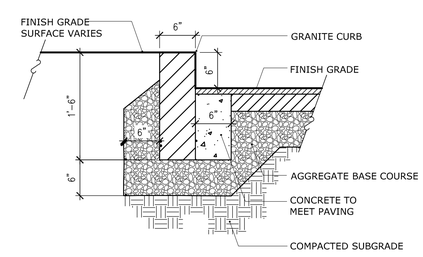

VERTICAL GRANITE CURB

NTS

Catlin + Petrovick Architects PC

51 Railroad Street Suite 130
Keene, New Hampshire, 03431
(603) 352-2255

www.c-parchitect.com

☐	PRELIMINARY DESIGN	DATE:
☐	SCHEMATIC DESIGN	DATE:
☐	DESIGN DEVELOPMENT	DATE:
☐	CD'S 100%	DATE:
☐	BID SET	DATE:
☐	PERMIT SET	DATE: 10.14.14
☐	CONSTRUCTION SET	DATE:

Consultants:

CIVIL/LANDSCAPE

Land Planning, Civil Engineering, Landscape Architecture
Po Box 307
Foxborough, MA
www.devellizrein.com
tel. 508.473.4114

DeVellis Zrein Inc.

ELECTRICAL ENGINEER

Sam Zax Associates, LLC
14 Wood RD
Braintree, MA 02184
781 303.1700 Work
mzax@zaxengineering.com

M/P/FP ENGINEER

VAV International (Semoon Oh)
400 West Cummings Park S-4700
Worburn, MA 01801
781 935.1822
soh@vavint.com

STRUCTURAL ENGINEER

Foley Buhl Roberts & Associates, Inc.
500 Commercial Street
Manchester, NH 03101
603 622.4578 Work
603 622.4593 Fax
rroberts@fbra.com

No.	Description	Date

Project Title:

Tolles-Parsons Senior Center

496-494 Washington St
Wellesley, MA 02482

Sheet Title:

SITE DETAIL SHEET

THE ABOVE DRAWINGS AND SPECIFICATIONS AND IDEAS,DESIGNS AND ARRANGEMENTS REPRESENTED THEREBY ARE AND SHALL REMAIN THE PROPERTY OF THE ARCHITECT AND NO PART THEREOF SHALL BE COPIED, DISCLOSED TO OTHERS OR USED IN CONNECTION WITH ANY WORK OR PROJECT OTHER THAN THE SPECIFIED PROJECT FOR WHICH THEY HAVE BEEN PREPARED AND DEVELOPED WITHOUT THE WRITTEN CONSENT OF THE ARCHITECT. THE ARCHITECT'S DRAWINGS AND SPECIFICATIONS AND WRITTEN DIMENSIONS ON THESE DRAWINGS SHALL HAVE PRECEDENCE OVER SCALED DIMENSION CONTRACTORS SHALL VERIFY, AND BE RESPONSIBLE FOR, ALL DIMENSIONS AND CONDITIONS ON THE SHOP DRAWINGS THEY MUST BE NOTIFIED OF ANY VARIATIONS FROM THE DIMENSIONS AND CONDITIONS SHOWN BY THESE DRAWINGS.

Project Number:	20140018
Drawn By:	IAZ
Scale:	1" = 20'

AS SHOWN

C-4

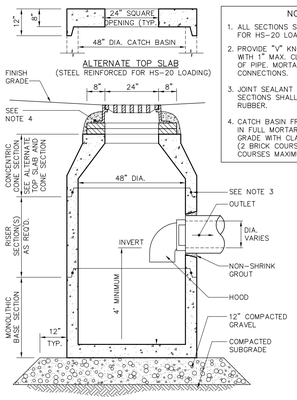

NOTES:
1. ALL SECTIONS SHALL BE DESIGNED FOR HS-20 LOADING.
2. PROVIDE "V" KNOCKOUTS FOR PIPES WITH 1" MAX. CLEARANCE TO OUTSIDE OF PIPE. MORTAR ALL PIPE CONNECTIONS.
3. JOINT SEALANT BETWEEN PRECAST SECTIONS SHALL BE PREFORMED BUTYL RUBBER.
4. CATCH BASIN FRAME SHALL BE SET IN FULL MORTAR BED. ADJUST TO GRADE WITH CLAY BRICK AND MORTAR (2 BRICK COURSES TYPICALLY, 5 BRICK COURSES MAXIMUM)

CATCH BASIN (CB)

NTS

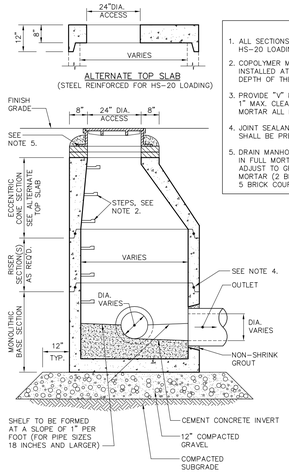

NOTES:
1. ALL SECTIONS SHALL BE DESIGNED FOR HS-20 LOADING.
2. COPOLYMER MANHOLE STEPS SHALL BE INSTALLED AT 12" O.C. FOR THE FULL DEPTH OF THE STRUCTURE.
3. PROVIDE "V" KNOCKOUTS FOR PIPES WITH 1" MAX. CLEARANCE TO OUTSIDE OF PIPE. MORTAR ALL PIPE CONNECTIONS.
4. JOINT SEALANT BETWEEN PRECAST SECTIONS SHALL BE PREFORMED BUTYL RUBBER.
5. DRAIN MANHOLE FRAME SHALL BE SET IN FULL MORTAR BED. ADJUST TO GRADE WITH CLAY BRICK AND MORTAR (2 BRICK COURSES TYPICALLY, 5 BRICK COURSES MAXIMUM)

DRAIN MANHOLE (DMH)

NTS

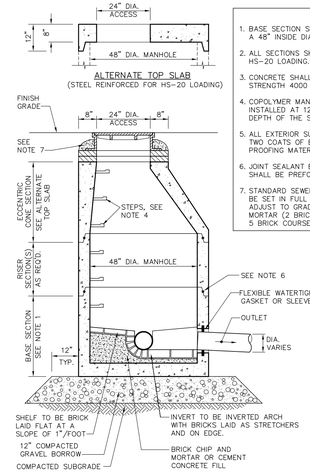

NOTES:
1. BASE SECTION SHALL BE MONOLITHIC WITH A 48" INSIDE DIAMETER.
2. ALL SECTIONS SHALL BE DESIGNED FOR HS-20 LOADING.
3. CONCRETE SHALL BE COMPRESSIVE STRENGTH 4000 PSI TYPE II CEMENT.
4. COPOLYMER MANHOLE STEPS SHALL BE INSTALLED AT 12" O.C. FOR THE FULL DEPTH OF THE STRUCTURE.
5. ALL EXTERIOR SURFACES SHALL BE GIVEN TWO COATS OF BITUMINOUS WATER-PROOFING MATERIAL.
6. JOINT SEALANT BETWEEN PRECAST SECTIONS SHALL BE PREFORMED BUTYL RUBBER.
7. STANDARD SEWER MANHOLE FRAME SHALL BE SET IN FULL MORTAR BED. ADJUST TO GRADE WITH CLAY BRICK AND MORTAR (2 BRICK COURSES TYPICALLY, 5 BRICK COURSES MAXIMUM)

SEWER MANHOLE (SMH)

NTS

NOTES:
1. BASE SECTION SHALL BE MONOLITHIC WITH A 48" INSIDE DIAMETER.
2. ALL SECTIONS SHALL BE DESIGNED FOR HS-20 LOADING.
3. CONCRETE SHALL BE COMPRESSIVE STRENGTH 4000 PSI TYPE II CEMENT.
4. FRAMES AND GRATES SHALL BE HEAVY DUTY AND DESIGNED FOR HS-20 LOADING.
5. PROVIDE "V" KNOCKOUTS FOR PIPES WITH 1" MAX. CLEARANCE TO OUTSIDE OF PIPE. MORTAR ALL PIPE CONNECTIONS.
6. JOINT SEALANT BETWEEN PRECAST SECTIONS SHALL BE BUTYL RUBBER.
7. STANDARD DOUBLE CATCH BASIN FRAME SHALL BE SET IN FULL MORTAR BED. ADJUST TO GRADE WITH CLAY BRICK AND MORTAR (2 BRICKS TYPICALLY, 5 BRICK COURSES MAXIMUM)

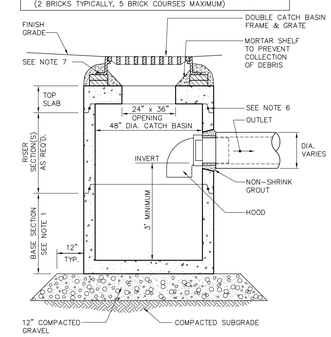

DOUBLE CATCH BASIN (DCB)

NTS

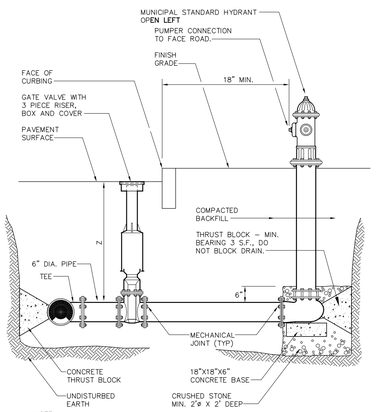

NOTE:
CONCRETE THRUST BLOCKS TO BE USED ONLY WHERE THEY CAN BEAR ON UNDISTURBED EARTH. USE CLAMPS AND TIE RODS OR OTHER ACCEPTABLE MEHTOD OF JOINT RESTRAINT WHERE SOIL CONDITIONS PROHIBIT THE USE OF THRUST BLOCKS.

HYDRANT

NTS

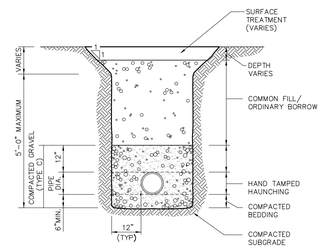

UTILITY TRENCH

NTS

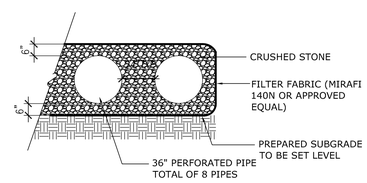

UNDERGROUND DETENTION SYSTEM

NTS

TABLE OF DIMENSIONS

BENDS		B	C	D	E	F	BENDS		B	C	D	E	F
6"	111/4°	8"	15"	12"	24"	12"	6"	45°	8"	30"	12"	24"	14"
6"	221/2°	-	19"	-	-	13"	6"	90°	-	30"	-	-	27"
8"	111/4°	-	20"	-	-	12"	8"	45°	-	30"	-	-	24"
8"	221/2°	-	22"	-	-	17"	8"	90°	-	38"	-	-	36"
12"	111/4°	-	30"	-	-	15"	12"	45°	-	40"	-	-	40"
12"	221/2°	-	35"	-	-	25"	12"	90°	-	60"	-	-	52"

BENDS

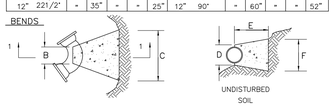

PLAN SECTION 1–1

TABLE OF DIMENSIONS

TEES	G	H	I	J	TEES	G	H	I	J
6"x 6"x 6"	12"	24"	24"	18"	12"x 12"x 6"	12"	24"	24"	18"
8"x 8"x 6"	"	"	"	"	12"x 12"x 8"	"	"	"	24"
8"x 8"x 8"	"	"	"	24"	12"x 12"x 12"	"	36"	"	36"

TEES

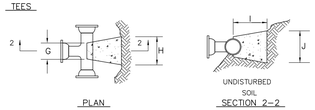

PLAN SECTION 2–2

NOTES:
1. PROVIDE BLOCKS FOR TAPPING SLEEVES, DEAD ENDS, GATE VALVES, AND VERTICAL BENDS (SAME SIZE AS REQUIRED FOR TEES). PROVIDE ANCHOR RODS AT VERTICAL BENDS AND GATE VALVES.
2. CONCRETE SHALL NOT BE PLACED AGAINST PIPE BEYOND FITTING.

CONCRETE THRUST BLOCKS

NTS

NOTES:
1. ALL SECTIONS SHALL BE DESIGNED FOR HS-20 LOADING.
2. COPOLYMER MANHOLE STEPS SHALL BE INSTALLED AT 12" O.C. FOR THE FULL DEPTH OF THE STRUCTURE.
3. PROVIDE "V" KNOCKOUTS FOR PIPES WITH 1" MAX. CLEARANCE TO OUTSIDE OF PIPE. MORTAR ALL PIPE CONNECTIONS.
4. JOINT SEALANT BETWEEN PRECAST SECTIONS SHALL BE PREFORMED BUTYL RUBBER.
5. SEWER MANHOLE FRAME AND COVER SHALL BE SET IN FULL MORTAR BED. ADJUST TO GRADE WITH CLAY BRICK AND MORTAR (2 BRICK COURSES TYPICALLY, 5 BRICK COURSES MAXIMUM)
6. BASE SECTION SHALL HAVE AN INSIDE DIMENSION VERIFIED BY THE CONTRACTOR/ MANUFACTURER TO BE CONSTANT WITH THE GEOMETRICS AND SIZES.

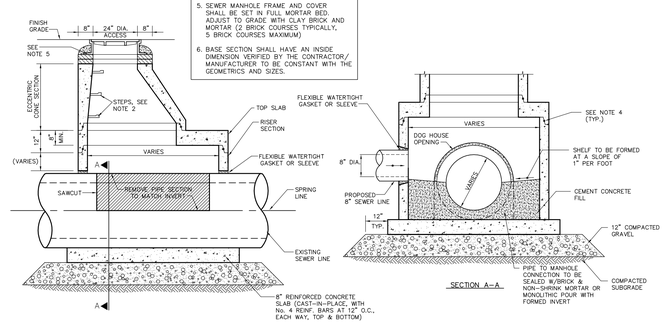

DROP OVER MANHOLE

NTS

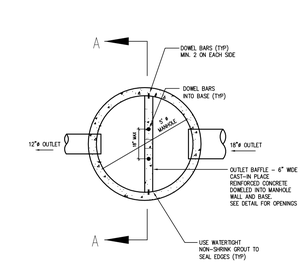

PLAN VIEW

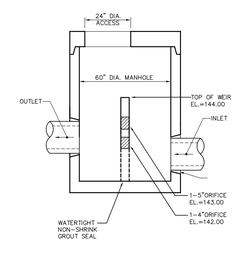

SECTION A–A

OUTLET CONTROL MANHOLE

NTS

Catlin + Petrovick Architects PC

51 Railroad Street Suite 130
Keene, New Hampshire, 03431
(603) 352-2255

www.c-parchitect.com

☐	PRELIMINARY DESIGN	DATE:
☐	SCHEMATIC DESIGN	DATE:
☐	DESIGN DEVELOPMENT	DATE:
☐	CD'S 100%	DATE:
☐	BID SET	DATE:
☐	PERMIT SET	DATE: 10.14.14
☐	CONSTRUCTION SET	DATE:

Consultants:

CIVIL/LANDSCAPE

Land Planning, Civil Engineering, Landscape Architecture
Po Box 307
Foxborough, MA
www.devellizrein.com
tel. 508.473.4114

DeVellis Zrein Inc.

ELECTRICAL ENGINEER

Sam Zax Associates, LLC
14 Wood RD
Braintree, MA 02184
781 303.1700 Work
mzax@zaxengineering.com

M/P/FP ENGINEER

VAV International (Semoon Oh)
400 West Cummings Park S-4700
Worburn, MA 01801
781 935.1822
soh@vavint.com

STRUCTURAL ENGINEER

Foley Buhl Roberts & Associates, Inc.
500 Commercial Street
Manchester, NH 03101
603 622.4578 Work
603 622.4593 Fax
rroberts@fbra.com

No.	Description	Date

Project Title:

Tolles-Parsons Senior Center

496-494 Washington St
Wellesley, MA 02482

Sheet Title:

SITE DETAIL SHEET

THE ABOVE DRAWINGS AND SPECIFICATIONS AND IDEAS,DESIGNS AND ARRANGEMENTS REPRESENTED THEREBY ARE AND SHALL REMAIN THE PROPERTY OF THE ARCHITECT AND NO PART THEREOF SHALL BE SHOWN TO OTHERS OR PLACED IN THE POSSESSION OF ANY PERSON OR CORPORATION EXCEPT BY A WRITTEN THE SPECIFIED PROJECT FOR WHICH THEY HAVE BEEN PREPARED AND DEVELOPED WITHOUT THE WRITTEN CONSENT OF THE ARCHITECT VISUAL OF ACCEPTANCE OF THESE RESTRICTIONS.
WRITTEN DIMENSIONS ON THESE DRAWINGS SHALL HAVE PRECEDENCE OVER SCALE DIMENSION. CONTRACTORS SHALL VERIFY ALL DIMENSIONS AND CONDITIONS ON THE JOB AND THIS OFFICE MUST BE NOTIFIED OF ANY VARIATIONS FROM THE DIMENSIONS AND CONDITIONS SHOWN BY THESE DRAWINGS.

Project Number:	20140018
Drawn By:	IAZ
Scale:	1" = 20'

C-5